DRAWINGS

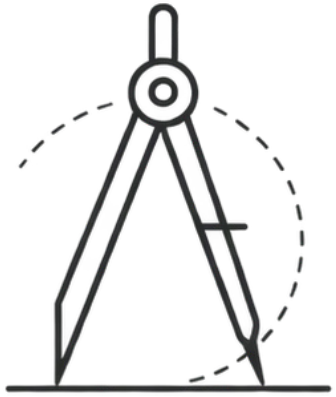

GÖTESSONS INDUSTRI AB
Rönnåsgatan 5B,
523 38 Ulricehamn
Box 56, 523 22 Ulricehamn
Tel +46 (0)321-687700
info@gotessons.se

GÖTESSONS

REVISIONS			
REV.	DESCRIPTION	DATE	BY
A	Created drawing	2021-05-17	Nina

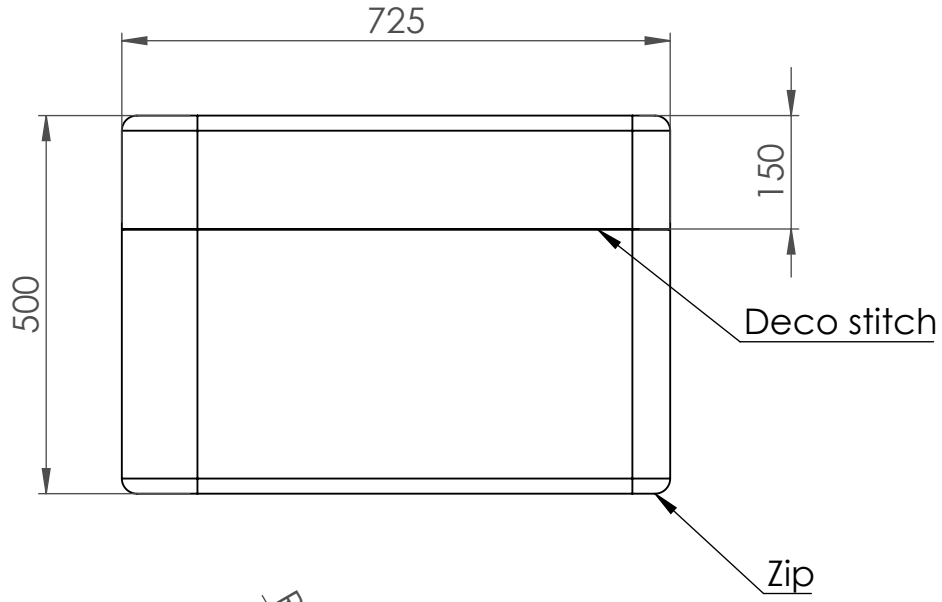

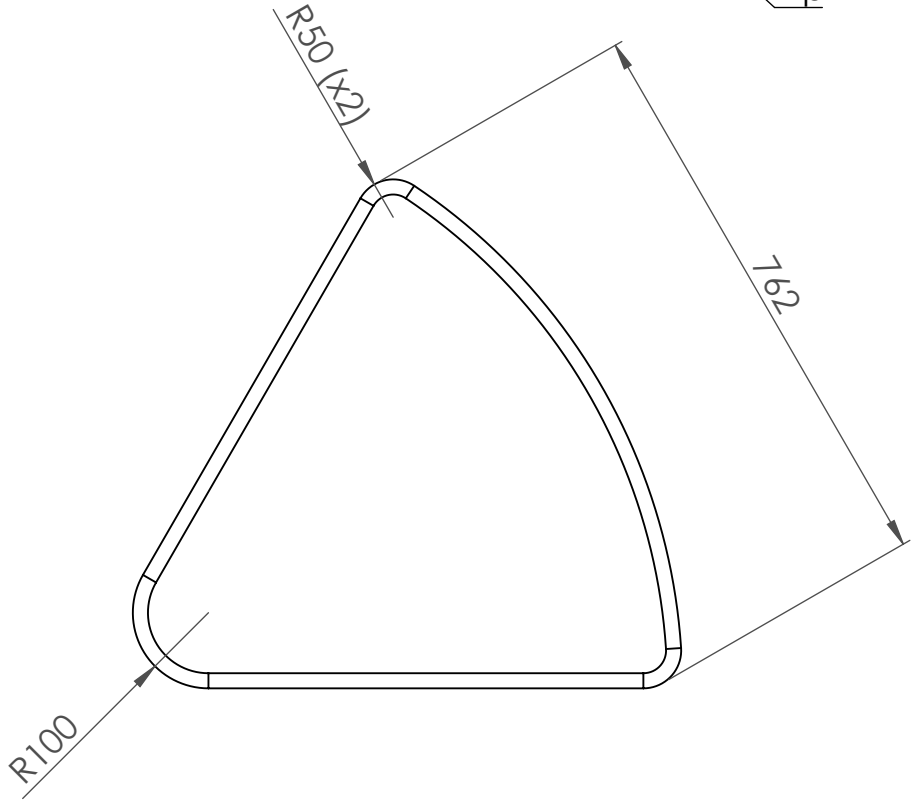

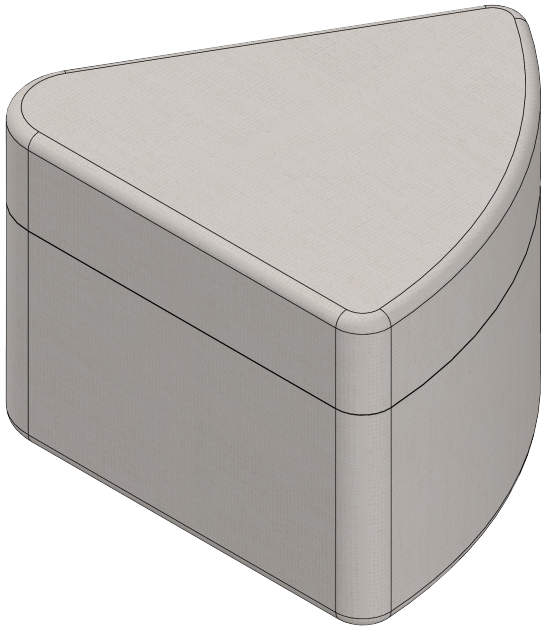

© 2024

GÖTESSONS

Art.nr.	Name
647145	Big piece of cake

View placement	General tolerance		Material
	SS-ISO 2768-1 m		

THIS DRAWING AND INFORMATION CONTAINED HERIN ARE THE PROPERTY OF GÖTESSONS DESIGN GROUP AB AND SHALL BE RETURNED UPON DEMAND AND SHALL NOT BE REPRODUCED IN WHOLE OR IN PART TO ANYONE ELSE OR USED WITHOUT WRITTEN CONSENT OF GÖTESSONS DESIGN GROUP AB

Rev	Format	Scale	Page
A	A4	1:10	1/2

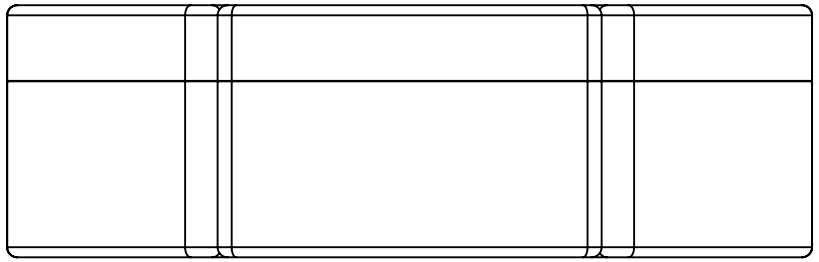

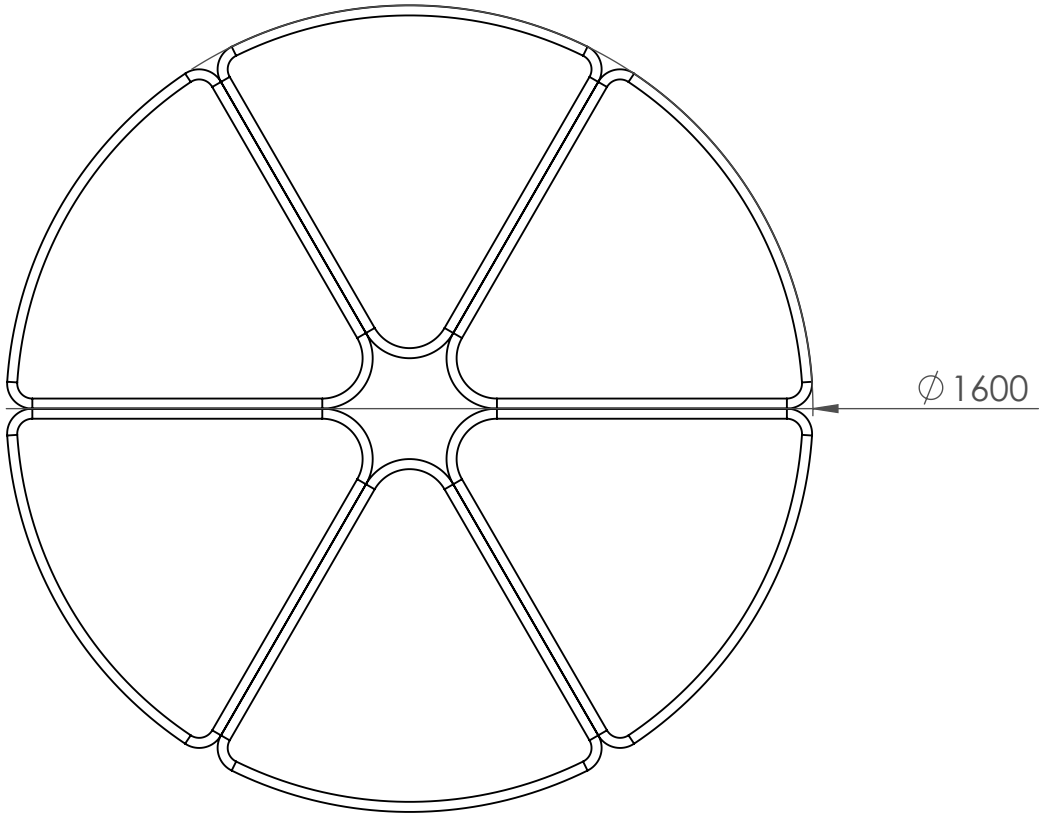

© 2024

GÖTESSONS

Art.nr.	Name
647145	Big Piece of cake

View placement	General tolerance		Material
	SS-ISO 2768-1 m		

THIS DRAWING AND INFORMATION CONTAINED HERIN ARE THE PROPERTY OF GÖTESSONS DESIGN GROUP AB AND SHALL BE RETURNED UPON DEMAND AND SHALL NOT BE REPRODUCED IN WHOLE OR IN PART TO ANYONE ELSE OR USED WITHOUT WRITTEN CONSENT OF GÖTESSONS DESIGN GROUP AB

Rev	Format	Scale	Page
A	A4	1:15	2/2