DRAWINGS

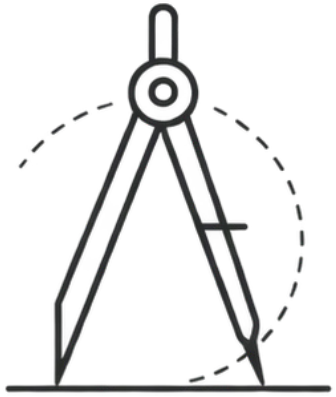

GÖTESSONS INDUSTRI AB
Rönnåsgatan 5B,
523 38 Ulricehamn
Box 56, 523 22 Ulricehamn
Tel +46 (0)321-687700
info@gotessons.se

GÖTESSONS

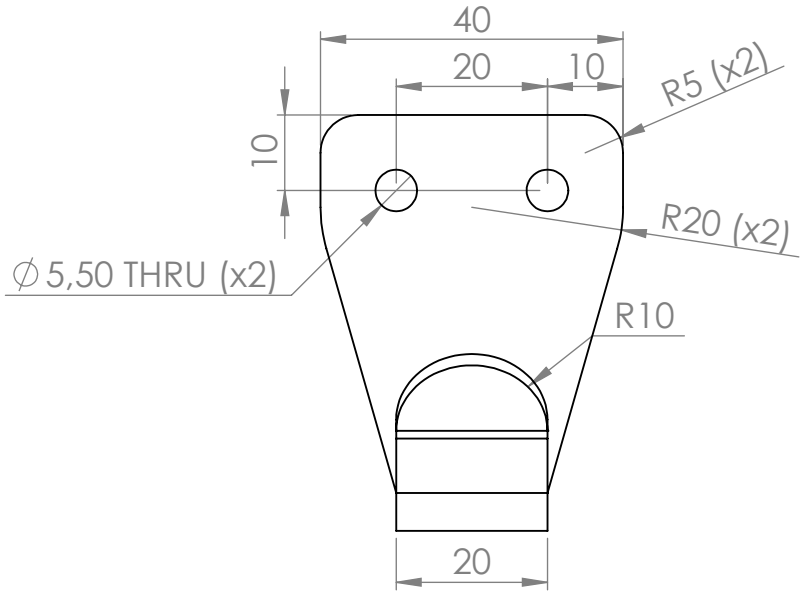

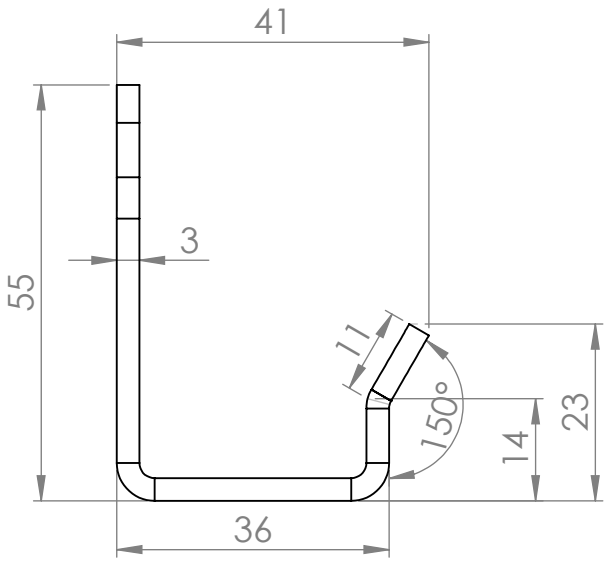

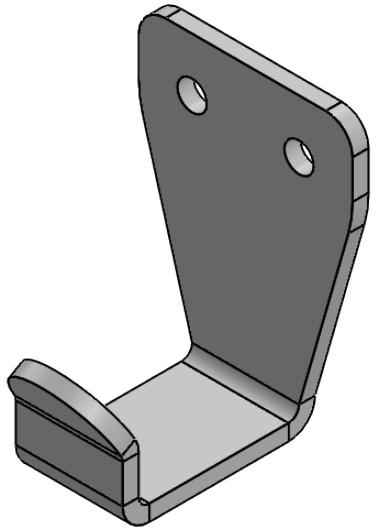

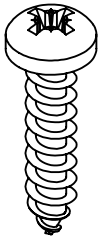

Including:
2 pcs KXTB 4,5x20 (PZ2)

GÖTESSONS

Art.nr.	Name				
671076	Wall hook for standing mat				
Last saved by	Last saved	Material	Rev	Format	
Jonathan	2019-07-10	Steel 3mm	-	A4	
Created by	Created date		Scale	Page	
Jonathan	2019-03-19		1:1	1/1	