DRAWINGS

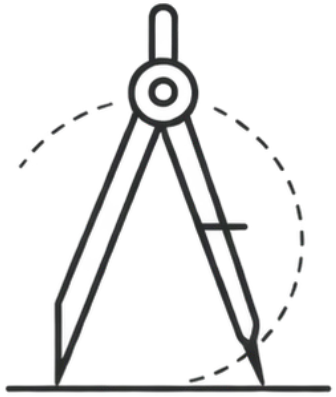

GÖTESSONS INDUSTRI AB
Rönnåsgatan 5B,
523 38 Ulricehamn
Box 56, 523 22 Ulricehamn
Tel +46 (0)321-687700
info@gotessons.se

GÖTESSONS

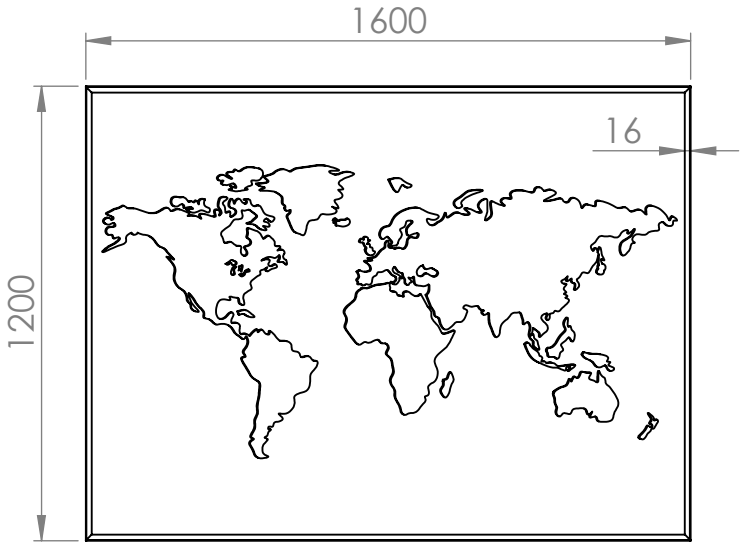

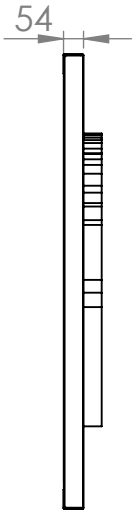

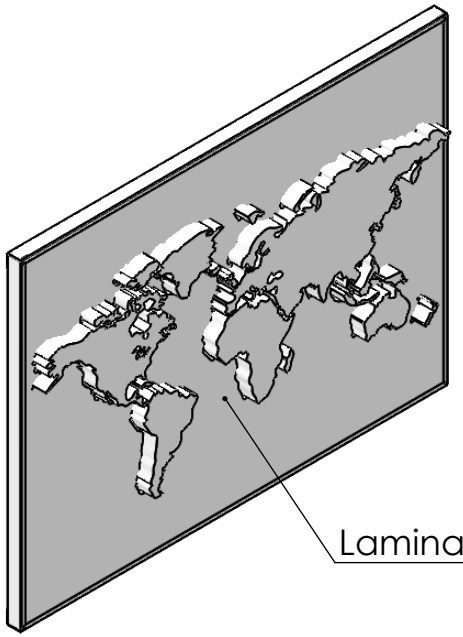

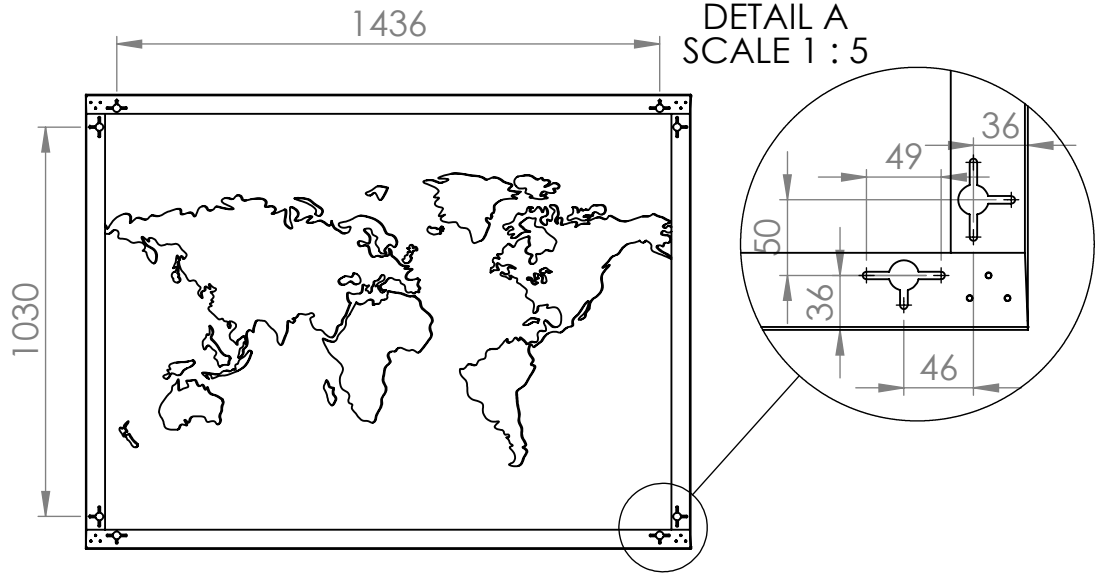

GÖTESSONS

Art.nr.	Name			
160120	Tell-Us world map 1600x1200x50 mm			
Last saved by: Tolle	Last saved: 2019-12-17	Material: EcoSUND	Rev:	Format: A4
Created by: Tolle	Created date: 2019-12-17		Scale: 1:20	Page: 1/1

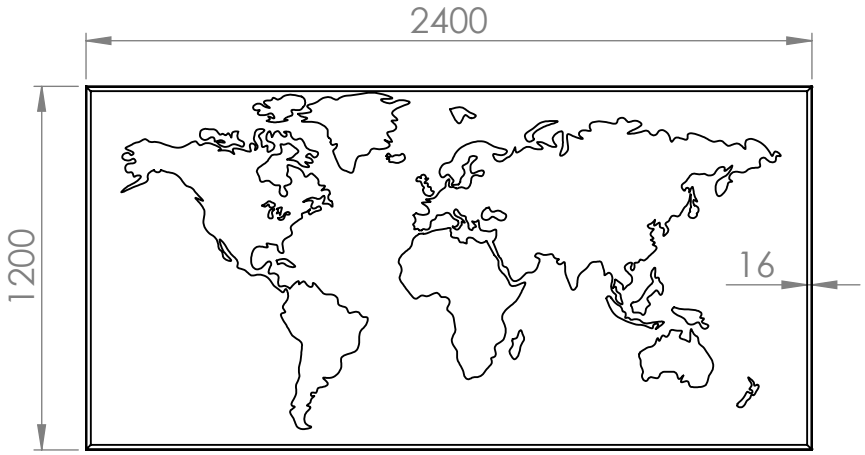

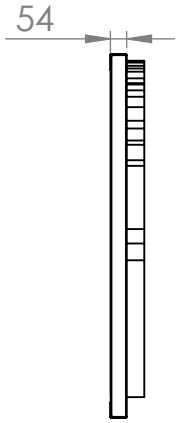

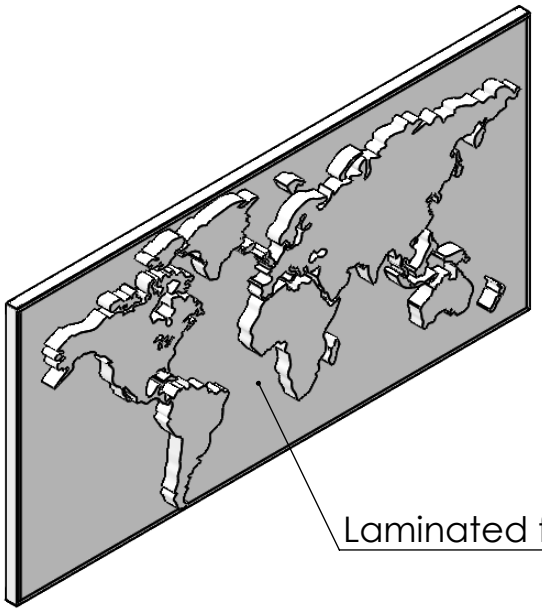

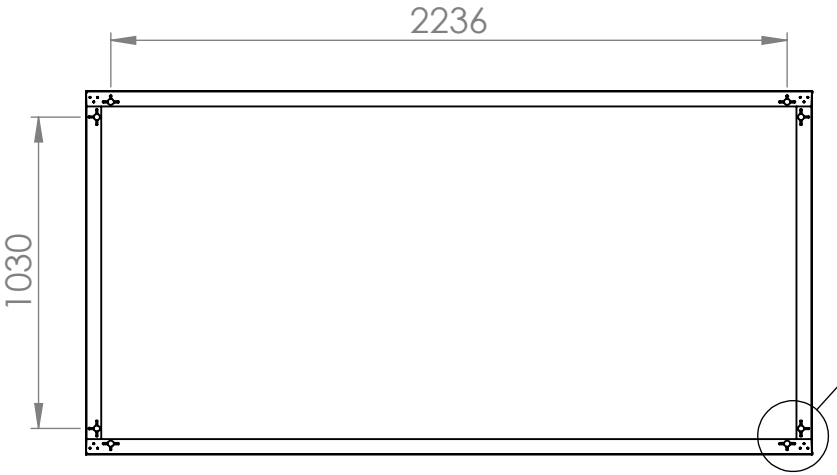

DETAIL A
SCALE 1 : 5

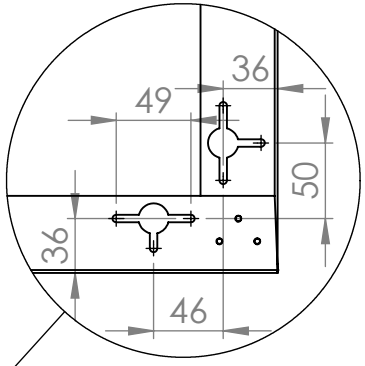

GÖTESSONS

Art.nr.	Name			
240120	Tell-Us world map 2400x1200x50 mm			
Last saved by: Tolle	Last saved: 2019-12-17	Material: EcoSUND	Rev:	Format: A4
Created by: Tolle	Created date: 2019-12-17		Scale: 1:25	Page: 1/1