DRAWINGS

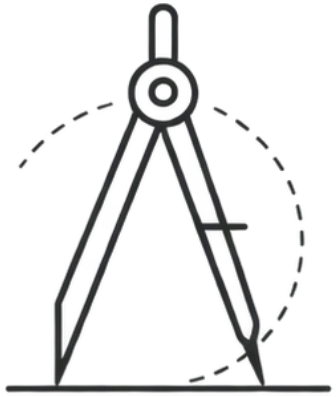

GÖTESSONS INDUSTRI AB
Rönnåsgatan 5B,
523 38 Ulricehamn
Box 56, 523 22 Ulricehamn
Tel +46 (0)321-687700
info@gotessons.se

GÖTESSONS

REVISIONS				
ZONE	REV.	DESCRIPTION	DATE	APPROVED
D4	A	Was Ø780	2023-11-14	Tolle
A4	B	4 holes added	2024-05-13	Aarash

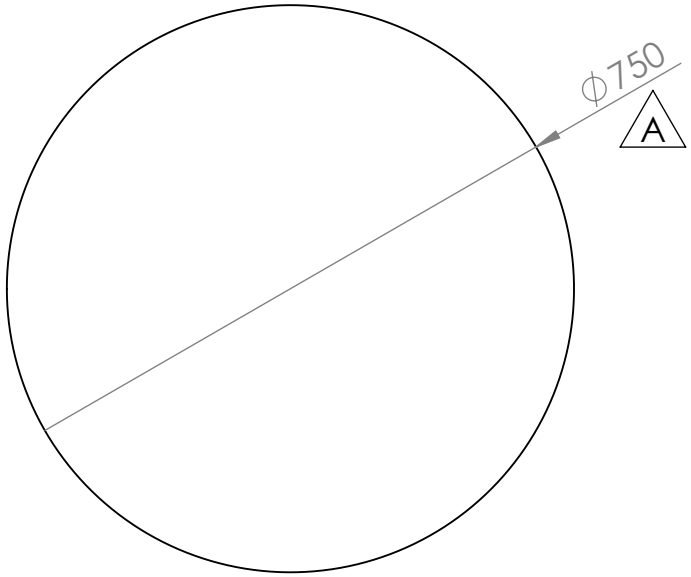

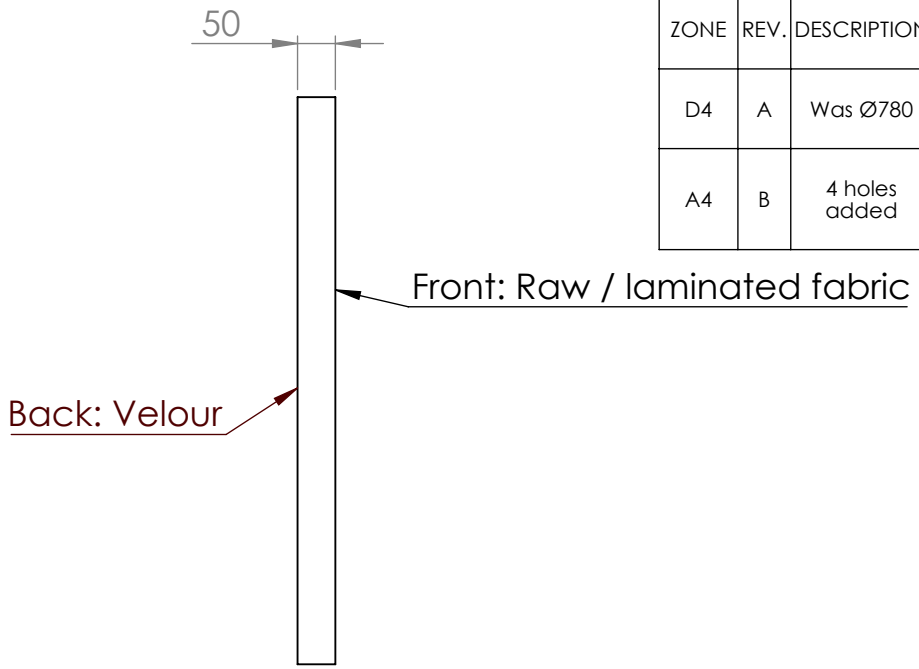

Kardborre platta (ingår) / Including hook and loop tape plate (x4)

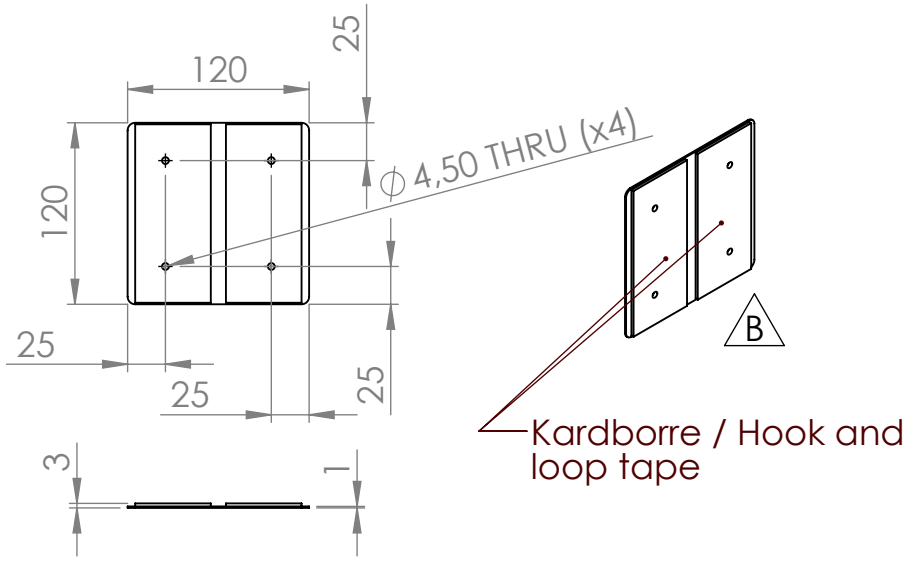

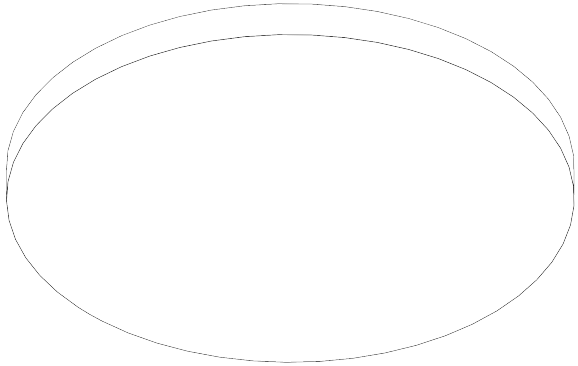

GÖTESSONS

Art.nr. 125384 & 125385	Name Sound Off Circle EcoSUND Ø800mm wall
View placement / General tolerance SS-ISO 2768-1 m	Material EcoSUND

THIS DRAWING AND INFORMATION CONTAINED HERIN ARE THE PROPERTY OF GÖTESSONS DESIGN GROUP AB AND SHALL BE RETURNED UPON DEMAND AND SHALL NOT BE REPRODUCED IN WHOLE OR IN PART TO ANYONE ELSE OR USED WITHOUT WRITTEN CONSENT OF GÖTESSONS DESIGN GROUP AB

Rev	Format	Scale	Page
B	A4	1:10	1/1

REVISIONS		
REV.	DESCRIPTION	DATE
A	4 holes added	2024-05-13

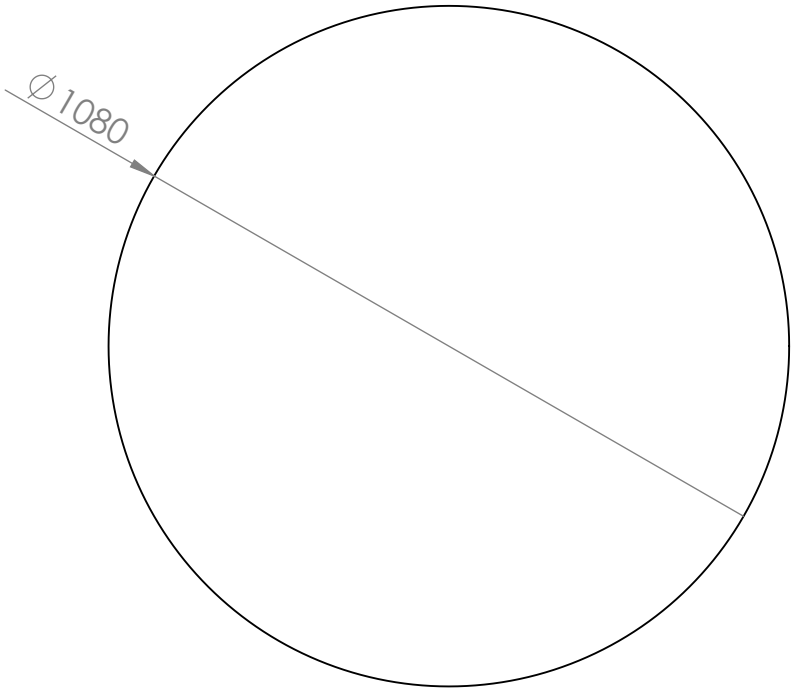

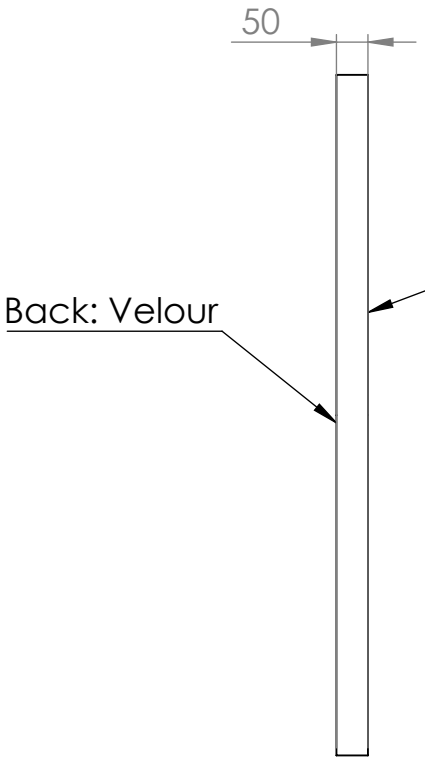

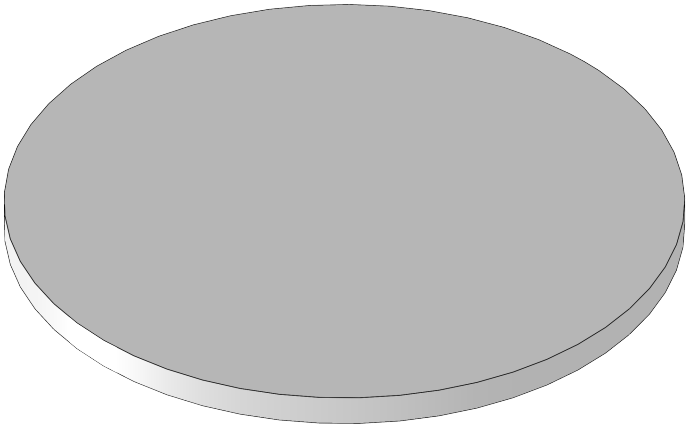

Kardborre platta (ingår) /
Including hook and loop
tape plate (x4)

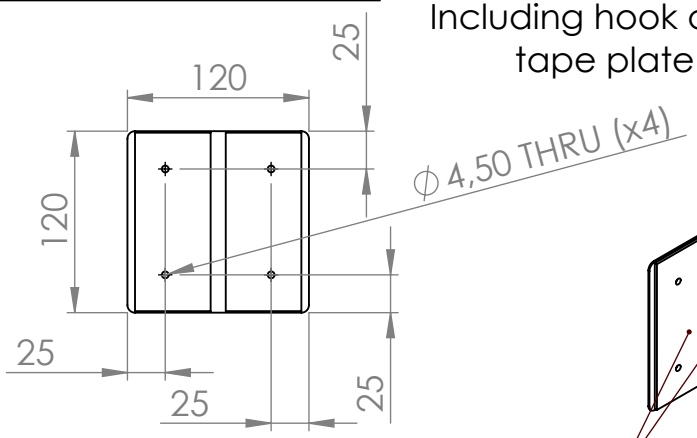

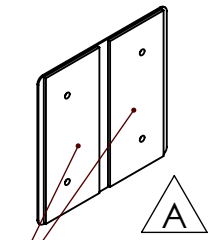

Kardborre / Hook and
loop tape

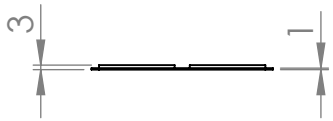

GÖTESSONS

Art.nr. 125386 & 125387	Name Sound Off Circle EcoSUND Ø1100mm wall
View placement / General tolerance SS-ISO 2768-1 m	Material EcoSUND

THIS DRAWING AND INFORMATION CONTAINED HERIN ARE THE PROPERTY OF GÖTESSONS DESIGN GROUP AB AND SHALL BE RETURNED UPON DEMAND AND SHALL NOT BE REPRODUCED IN WHOLE OR IN PART TO ANYONE ELSE OR USED WITHOUT WRITTEN CONSENT OF GÖTESSONS DESIGN GROUP AB

Rev	Format	Scale	Page
A	A4	1:12	1/1

REVISIONS		
REV.	DESCRIPTION	DATE
A	4 holes are added	2024-05-13

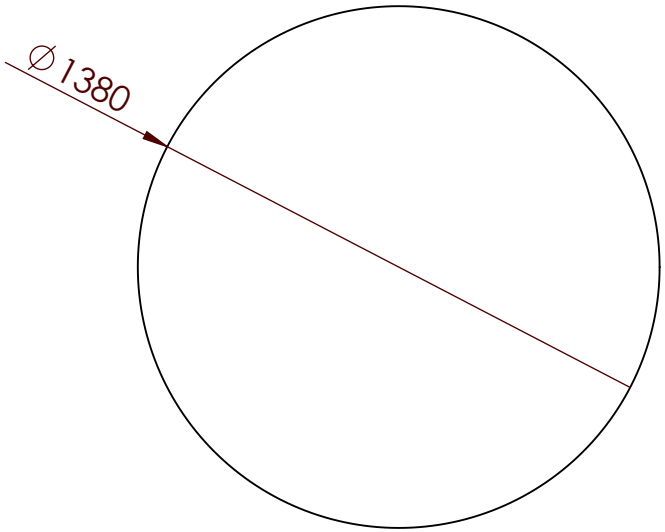

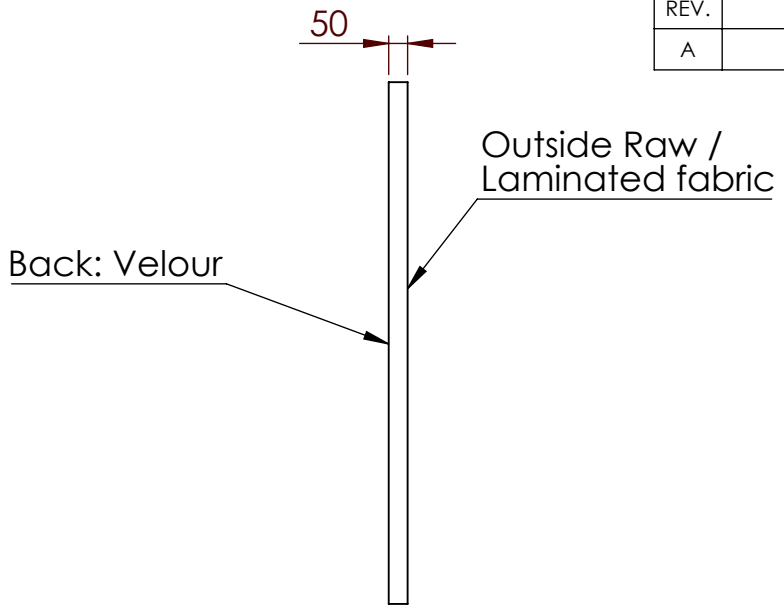

Kardborre platta (ingår) /
Including hook and loop
tape plate (x4)

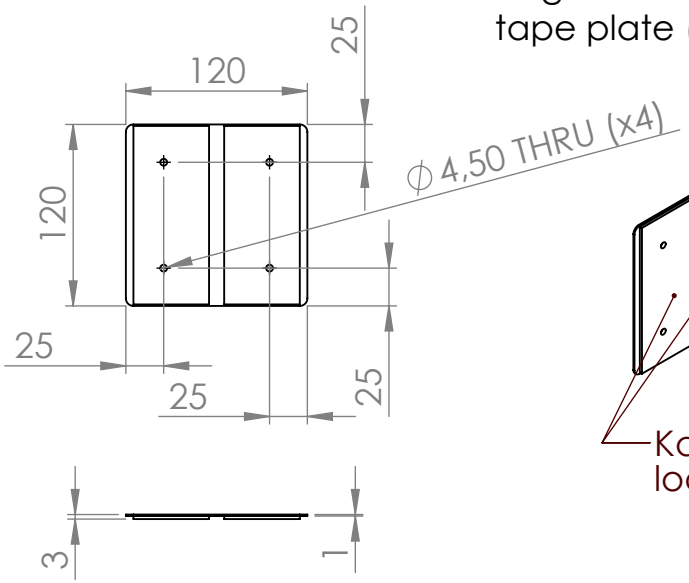

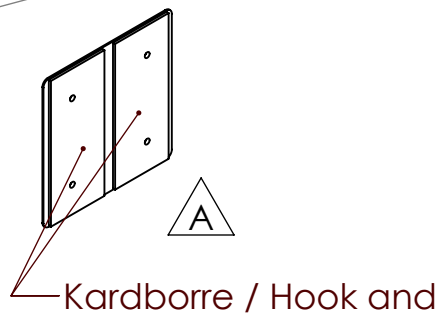

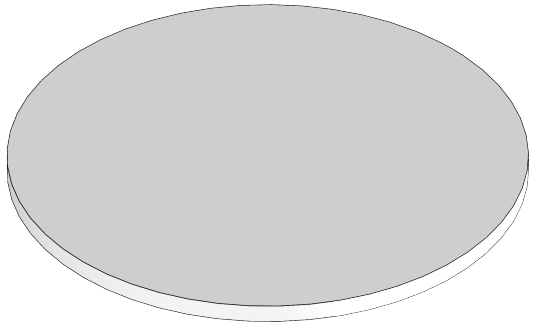

GÖTESSONS

Art.nr.	Name
125388 & 125389	Sound Off Circle EcoSUND Ø1400mm wall

View placement	General tolerance	Material
	SS-ISO 2768-1 m	EcoSUND

THIS DRAWING AND INFORMATION CONTAINED HERIN ARE THE PROPERTY OF GÖTESSONS INDUSTRI AB AND SHALL BE RETURNED UPON DEMAND AND SHALL NOT BE REPRODUCED IN WHOLE OR IN PART TO ANYONE ELSE OR USED WITHOUT WRITTEN CONSENT OF GÖTESSONS INDUSTRI AB

Rev	Format	Scale	Page
A	A4	1:20	1/1

REVISIONS		
REV.	DESCRIPTION	DATE
A	4 holes are added	2024-05-13

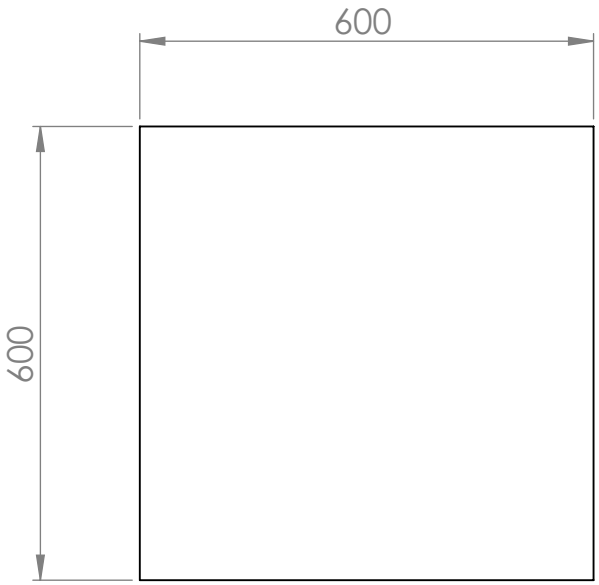

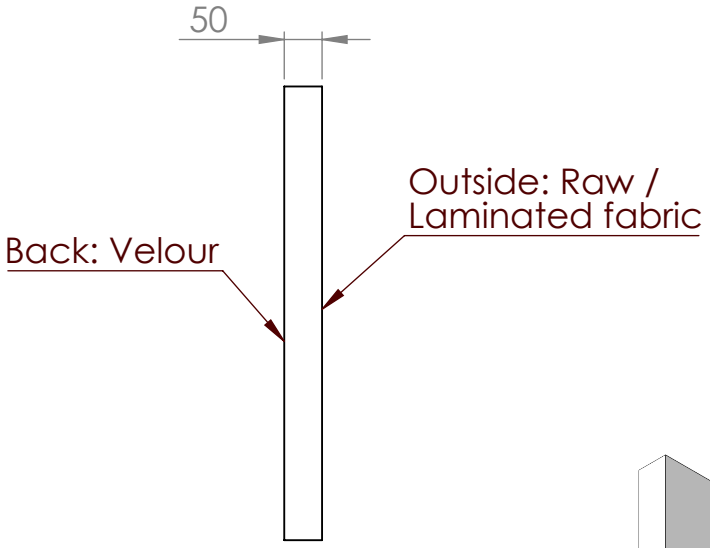

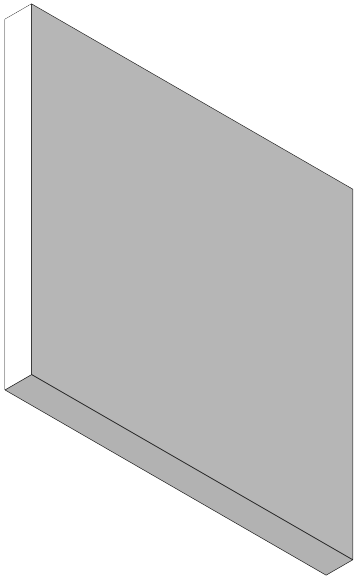

Kardborre platta (ingår) / Including hook and loop tape plate (x4)

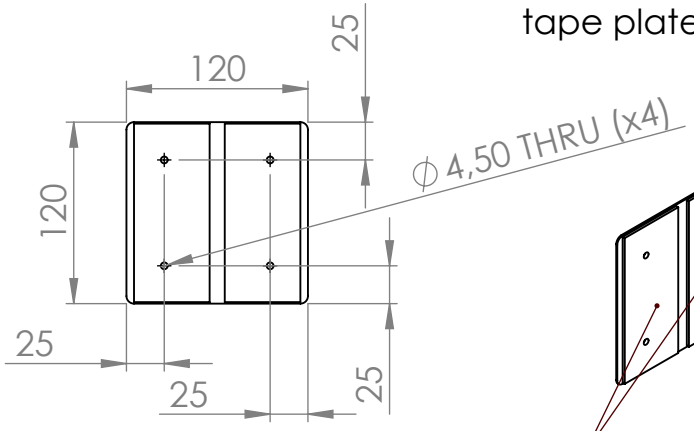

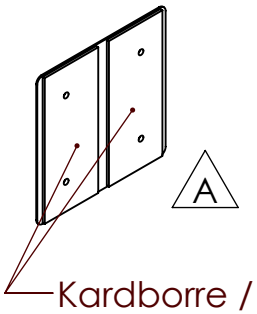

GÖTESSONS

Art.nr.	Name
125390 & 125391	Sound Off Square EcoSUND 600x600x50 mm wall

View placement	General tolerance	Material
	SS-ISO 2768-1 m	EcoSUND

THIS DRAWING AND INFORMATION CONTAINED HERIN ARE THE PROPERTY OF GÖTESSONS DESIGN GROUP AB AND SHALL BE RETURNED UPON DEMAND AND SHALL NOT BE REPRODUCED IN WHOLE OR IN PART TO ANYONE ELSE OR USED WITHOUT WRITTEN CONSENT OF GÖTESSONS DESIGN GROUP AB

Rev	Format	Scale	Page
A	A4	1:10	1/1

REVISIONS		
REV.	DESCRIPTION	DATE
A	4 holes are added	2024-05-13

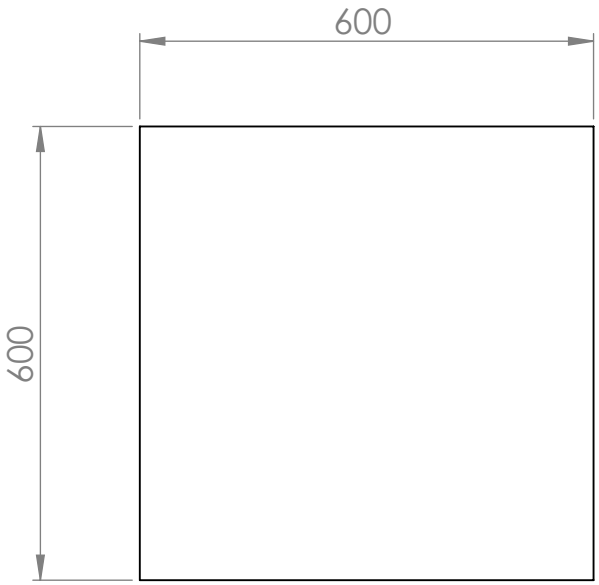

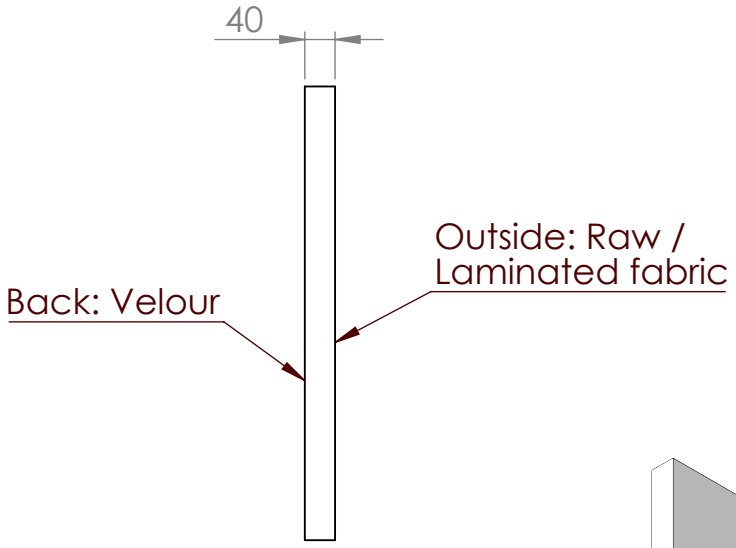

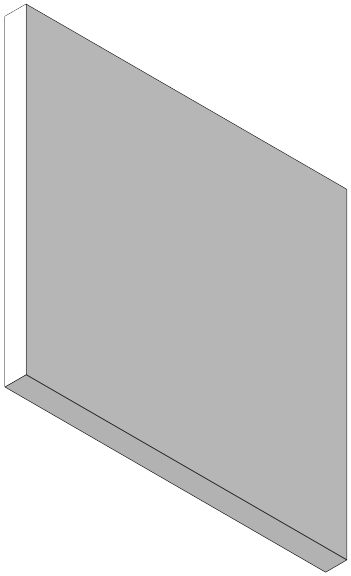

Kardborre platta (ingår) / Including hook and loop tape plate (x4)

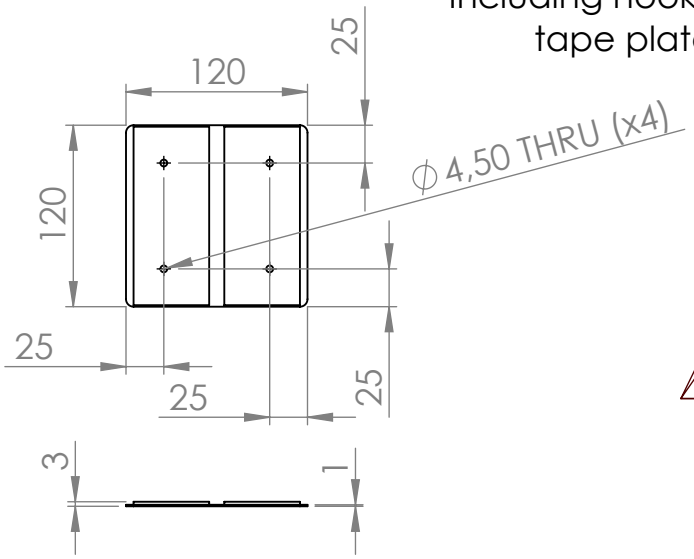

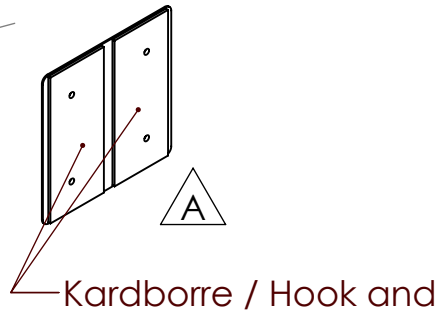

GÖTESSONS

Art.nr. 125404 &125405	Name Sound Off Square EcoSUND 600x600x40 mm wall
View placement / General tolerance SS-ISO 2768-1 m	Material EcoSUND
Rev A	Format A4
Scale 1:10	Page 1/1

THIS DRAWING AND INFORMATION CONTAINED HERIN ARE THE PROPERTY OF GÖTESSONS DESIGN GROUP AB AND SHALL BE RETURNED UPON DEMAND AND SHALL NOT BE REPRODUCED IN WHOLE OR IN PART TO ANYONE ELSE OR USED WITHOUT WRITTEN CONSENT OF GÖTESSONS DESIGN GROUP AB

REVISIONS		
REV.	DESCRIPTION	DATE
A	4 holes are added	2024-05-13

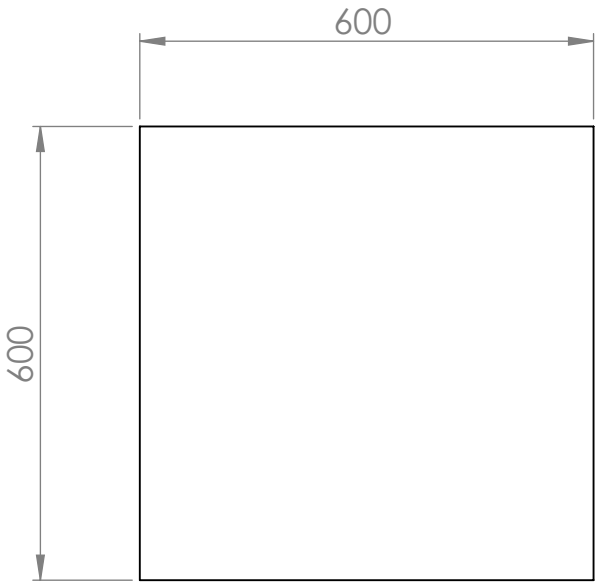

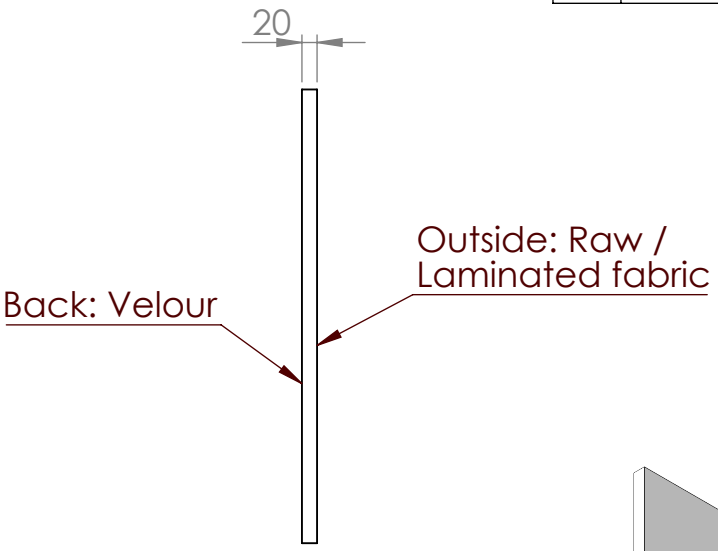

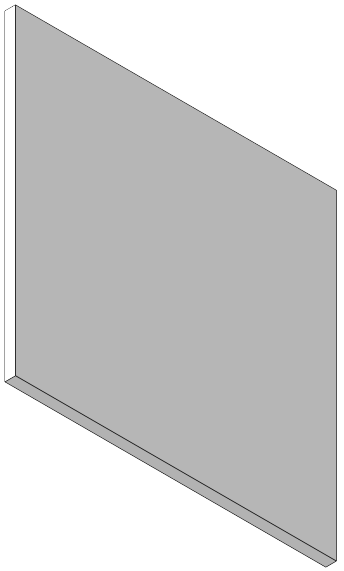

Kardborre platta (ingår) / Including hook and loop tape plate (x4)

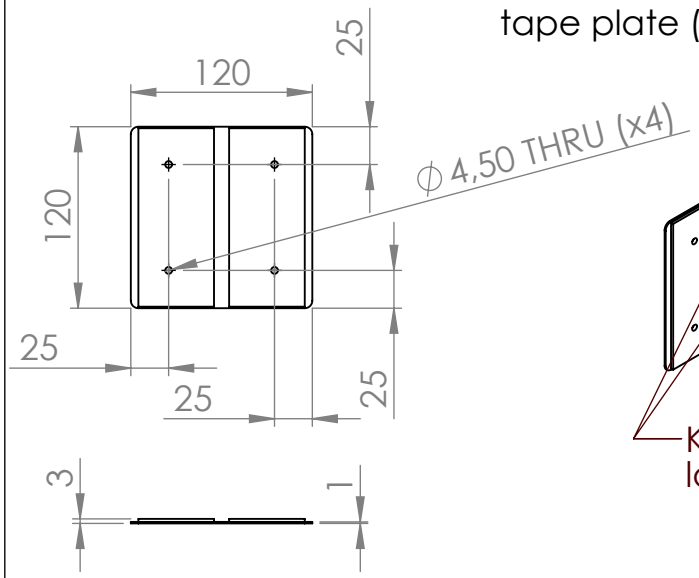

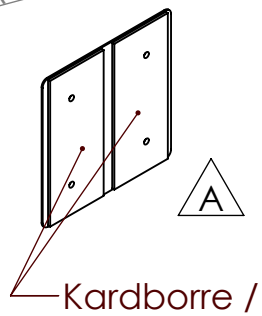

GÖTESSONS

Art.nr. 125406 & 125407	Name Sound Off Square EcoSUND 600x600x20 mm wall
View placement / General tolerance SS-ISO 2768-1 m	Material EcoSUND
Rev A	Format A4
Scale 1:10	Page 1/1

THIS DRAWING AND INFORMATION CONTAINED HERIN ARE THE PROPERTY OF GÖTESSONS DESIGN GROUP AB AND SHALL BE RETURNED UPON DEMAND AND SHALL NOT BE REPRODUCED IN WHOLE OR IN PART TO ANYONE ELSE OR USED WITHOUT WRITTEN CONSENT OF GÖTESSONS DESIGN GROUP AB

REVISIONS		
REV.	DESCRIPTION	DATE
A	4 holes are added	2024-05-13

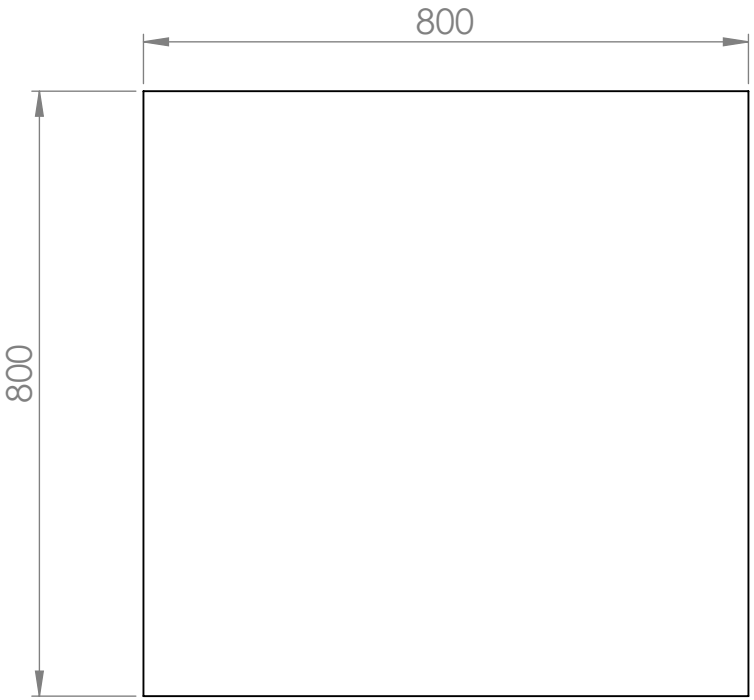

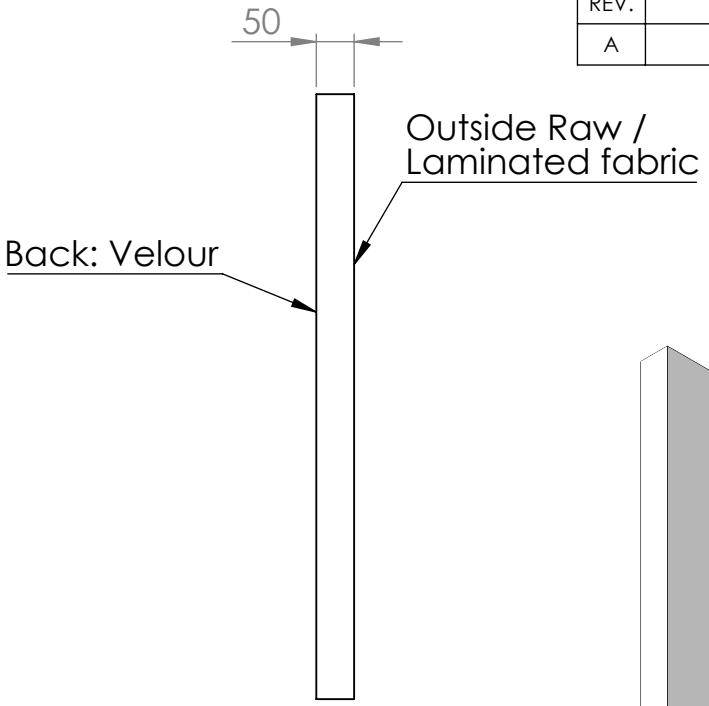

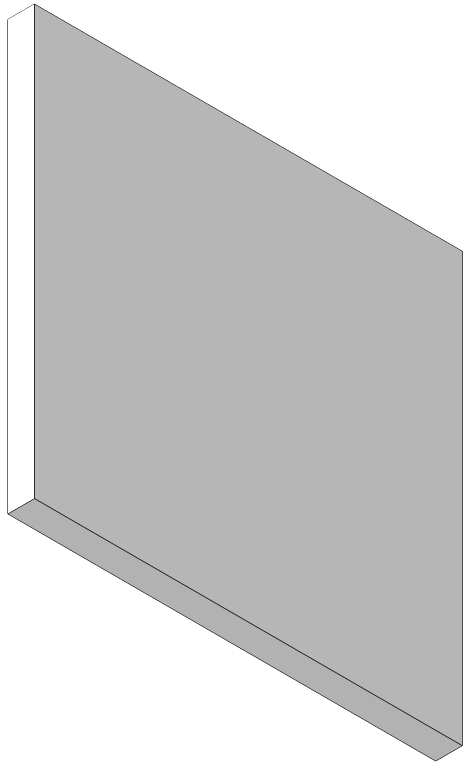

Kardborre platta (ingår) /
Including hook and loop
tape plate (x4)

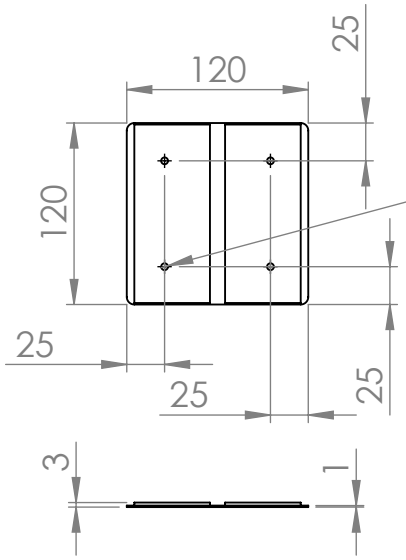

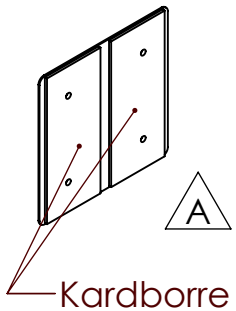

GÖTESSONS

Art.nr. 125392 & 125393	Name Sound Off Square EcoSUND 800x800x50 mm wall
View placement / General tolerance SS-ISO 2768-1 m	Material EcoSUND

THIS DRAWING AND INFORMATION CONTAINED HERIN ARE THE PROPERTY OF GÖTESSONS DESIGN GROUP AB AND SHALL BE RETURNED UPON DEMAND AND SHALL NOT BE REPRODUCED IN WHOLE OR IN PART TO ANYONE ELSE OR USED WITHOUT WRITTEN CONSENT OF GÖTESSONS DESIGN GROUP AB

Rev	Format	Scale	Page
A	A4	1:10	1/1

REVISIONS		
REV.	DESCRIPTION	DATE
A	4 holes are added	2024-05-13

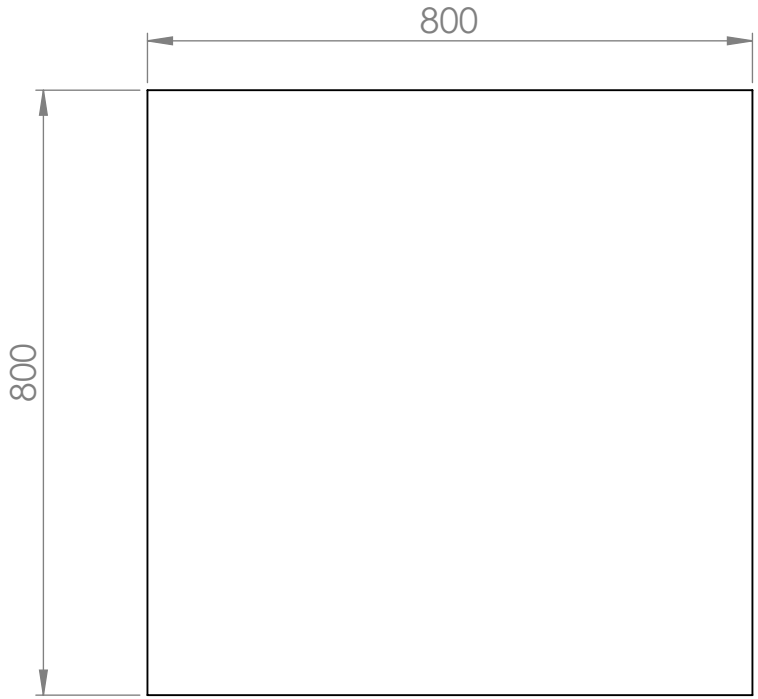

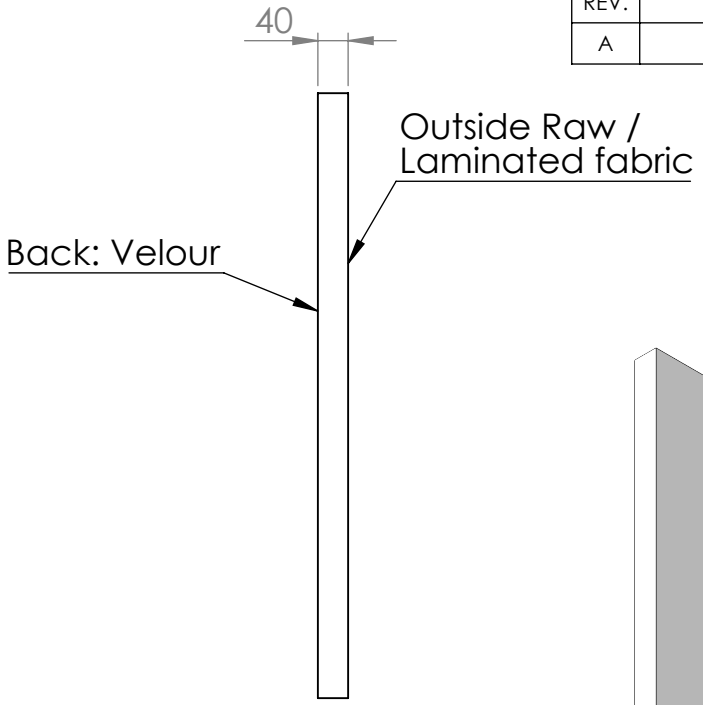

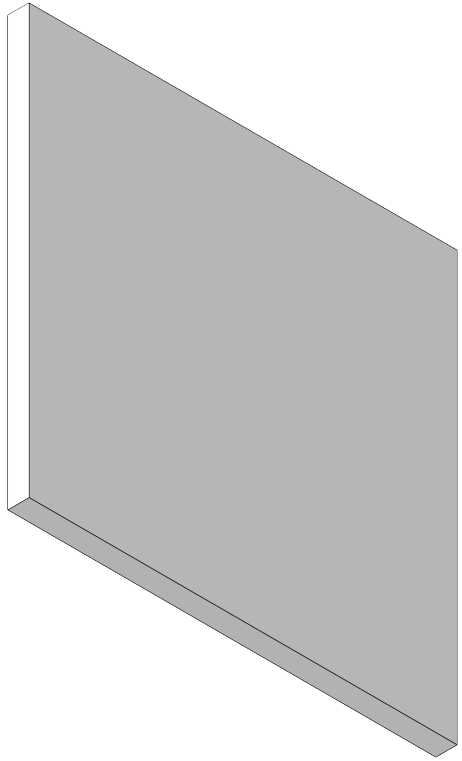

Kardborre platta (ingår) /
Including hook and loop
tape plate (x4)

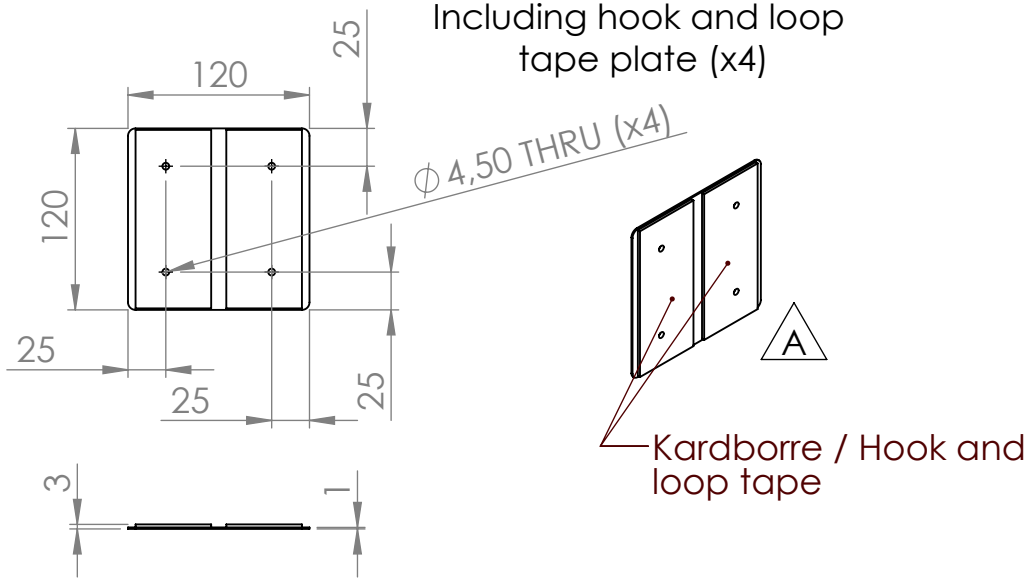

GÖTESSONS

Art.nr.	Name
125408 & 125409	Sound Off Square EcoSUND 800x800x40 mm wall

View placement	General tolerance	Material
	SS-ISO 2768-1 m	EcoSUND

THIS DRAWING AND INFORMATION CONTAINED HERIN ARE THE PROPERTY OF GÖTESSONS DESIGN GROUP AB AND SHALL BE RETURNED UPON DEMAND AND SHALL NOT BE REPRODUCED IN WHOLE OR IN PART TO ANYONE ELSE OR USED WITHOUT WRITTEN CONSENT OF GÖTESSONS DESIGN GROUP AB

Rev	Format	Scale	Page
A	A4	1:10	1/1

REVISIONS		
REV.	DESCRIPTION	DATE
A	4 holes are added	2024-05-13

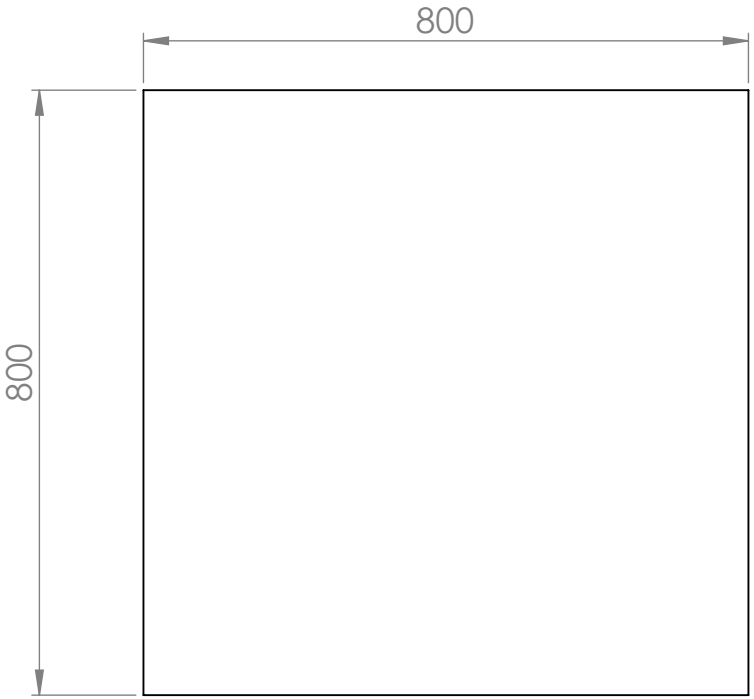

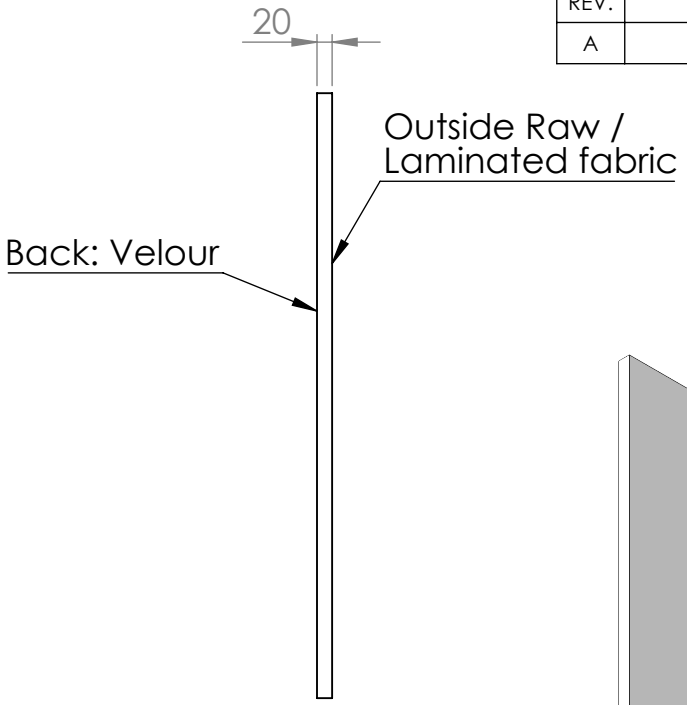

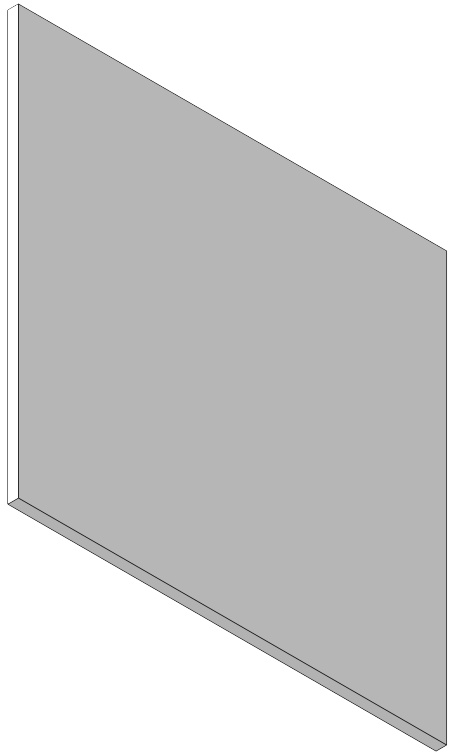

Kardborre platta (ingår) /
Including hook and loop
tape plate (x4)

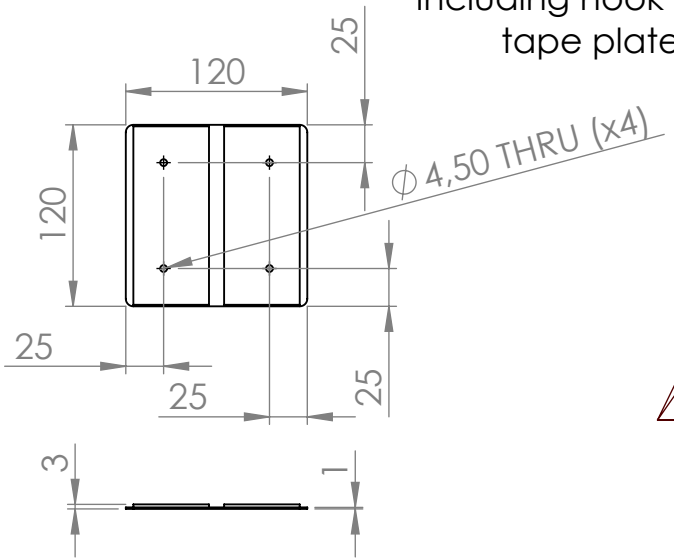

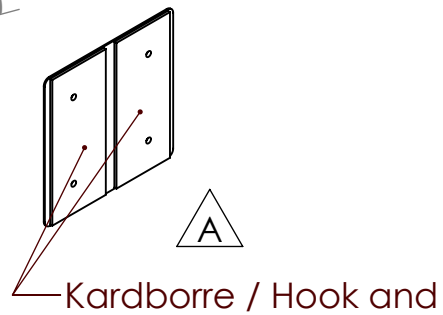

GÖTESSONS

Art.nr.	Name
125410 & 125411	Sound Off Square EcoSUND 800x800x20 mm wall

View placement	General tolerance	Material
	SS-ISO 2768-1 m	EcoSUND

THIS DRAWING AND INFORMATION CONTAINED HERIN ARE THE PROPERTY OF GÖTESSONS DESIGN GROUP AB AND SHALL BE RETURNED UPON DEMAND AND SHALL NOT BE REPRODUCED IN WHOLE OR IN PART TO ANYONE ELSE OR USED WITHOUT WRITTEN CONSENT OF GÖTESSONS DESIGN GROUP AB

Rev	Format	Scale	Page
A	A4	1:10	1/1

REVISIONS		
REV.	DESCRIPTION	DATE
A	4 holes are added	2024-05-13

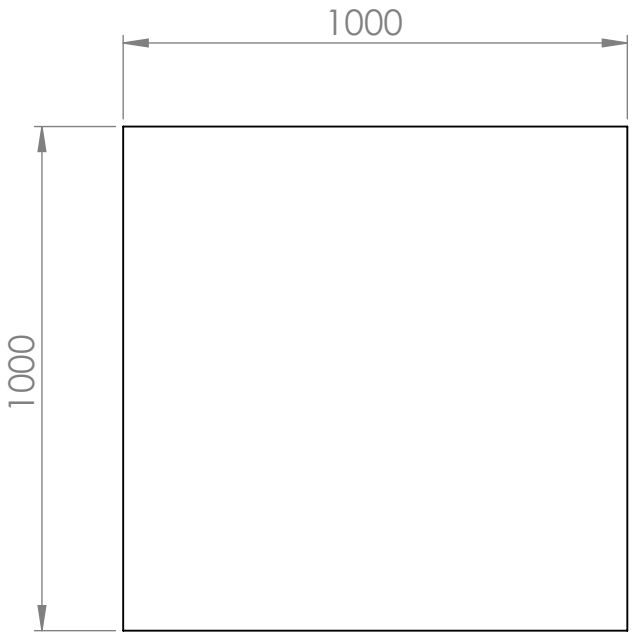

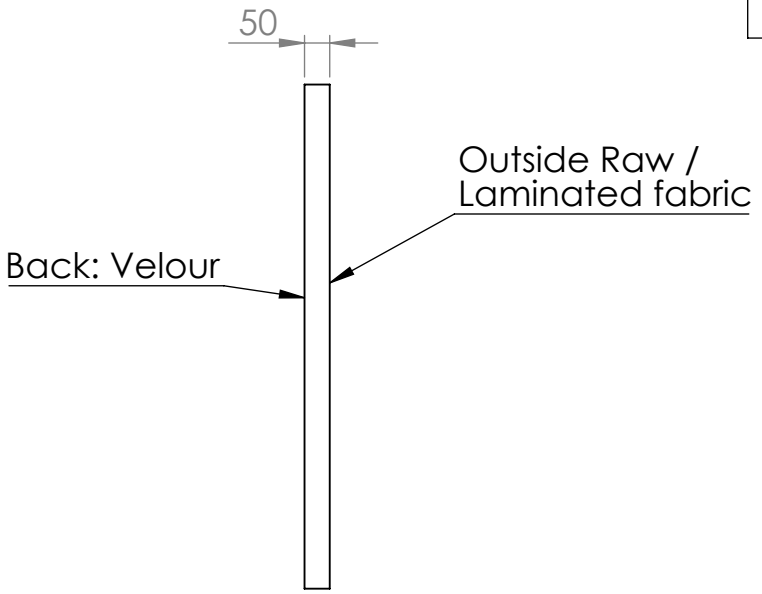

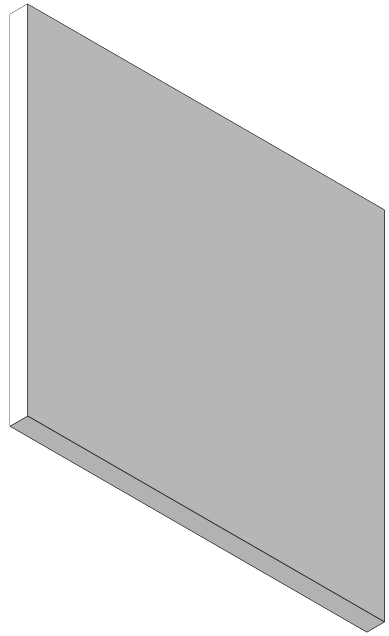

Kardborre platta (ingår) /
Including hook and loop
tape plate (x4)

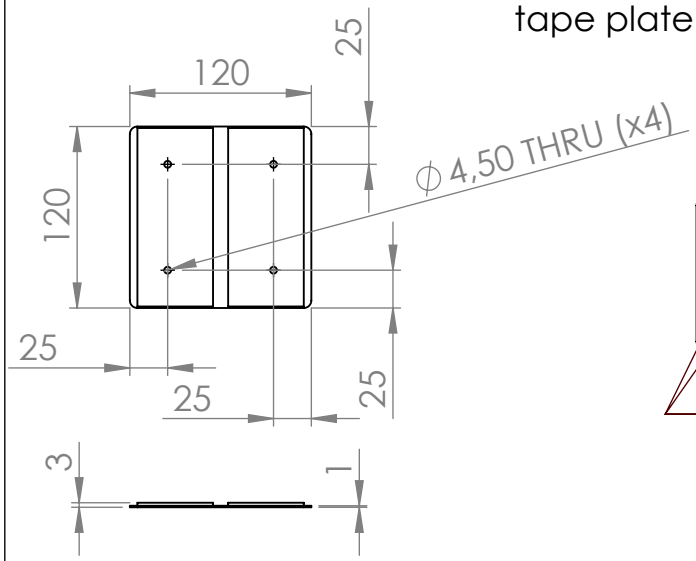

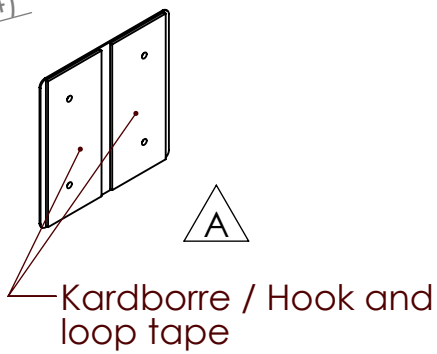

GÖTESSONS

Art.nr.	Name
125394 & 125395	Sound Off Square EcoSUND 1000x1000x50 mm wall

View placement	General tolerance	Material
	SS-ISO 2768-1 m	EcoSUND

THIS DRAWING AND INFORMATION CONTAINED HERIN ARE THE PROPERTY OF GÖTESSONS DESIGN GROUP AB AND SHALL BE RETURNED UPON DEMAND AND SHALL NOT BE REPRODUCED IN WHOLE OR IN PART TO ANYONE ELSE OR USED WITHOUT WRITTEN CONSENT OF GÖTESSONS DESIGN GROUP AB

Rev	Format	Scale	Page
A	A4	1:15	1/1

REVISIONS		
REV.	DESCRIPTION	DATE
A	4 holes are added	2024-05-13

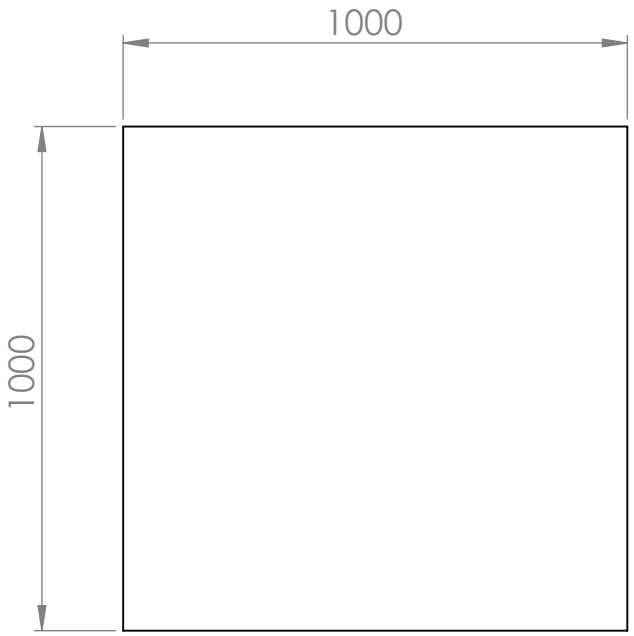

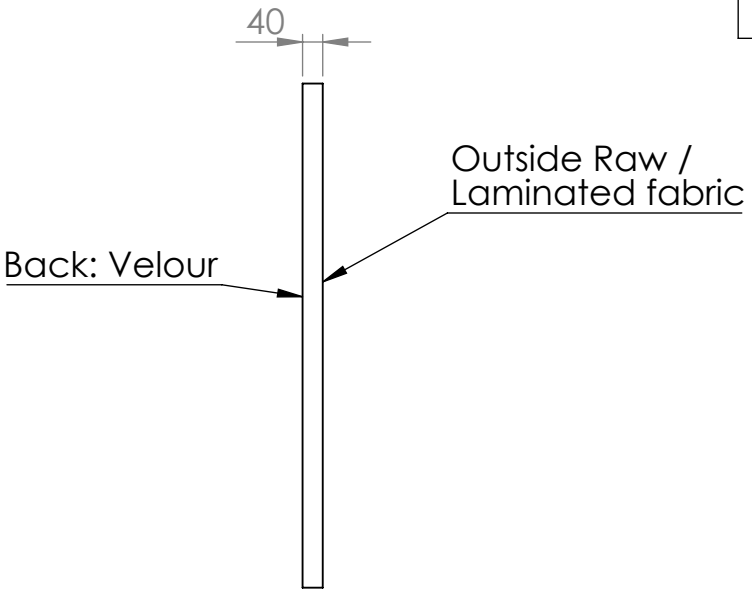

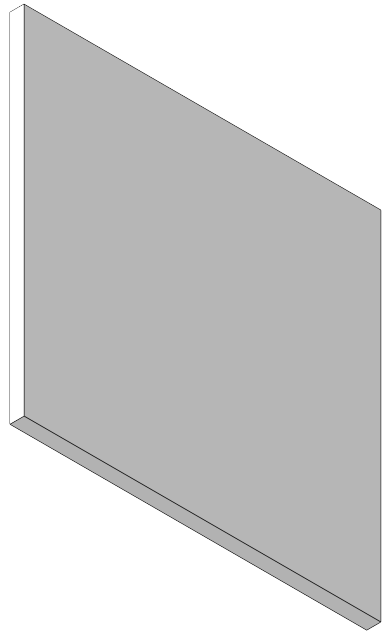

Kardborre platta (ingår) /
Including hook and loop
tape plate (x4)

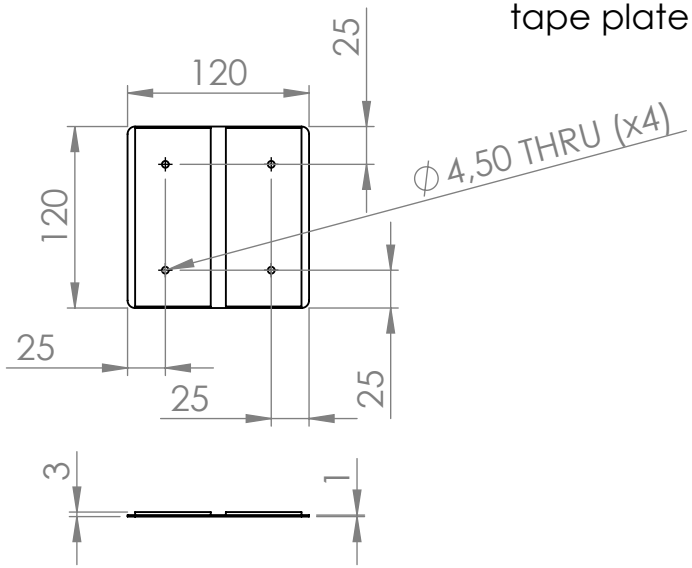

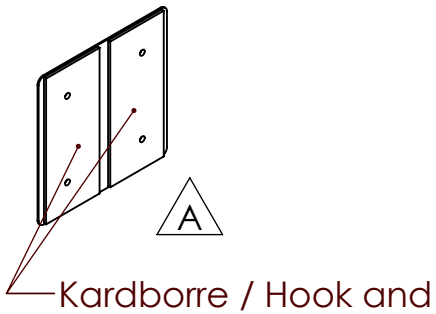

GÖTESSONS

Art.nr. 125412 & 125413	Name Sound Off Square EcoSUND 1000x1000x40 mm wall
View placement General tolerance SS-ISO 2768-1 m	Material EcoSUND

THIS DRAWING AND INFORMATION CONTAINED HERIN ARE THE PROPERTY OF GÖTESSONS DESIGN GROUP AB AND SHALL BE RETURNED UPON DEMAND AND SHALL NOT BE REPRODUCED IN WHOLE OR IN PART TO ANYONE ELSE OR USED WITHOUT WRITTEN CONSENT OF GÖTESSONS DESIGN GROUP AB

Rev	Format	Scale	Page
A	A4	1:15	1/1

REVISIONS		
REV.	DESCRIPTION	DATE
A	4 holes are added	2024-05-13

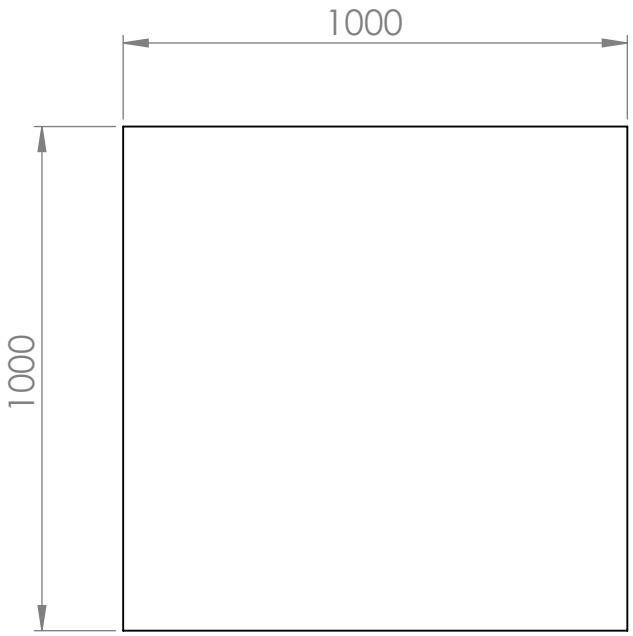

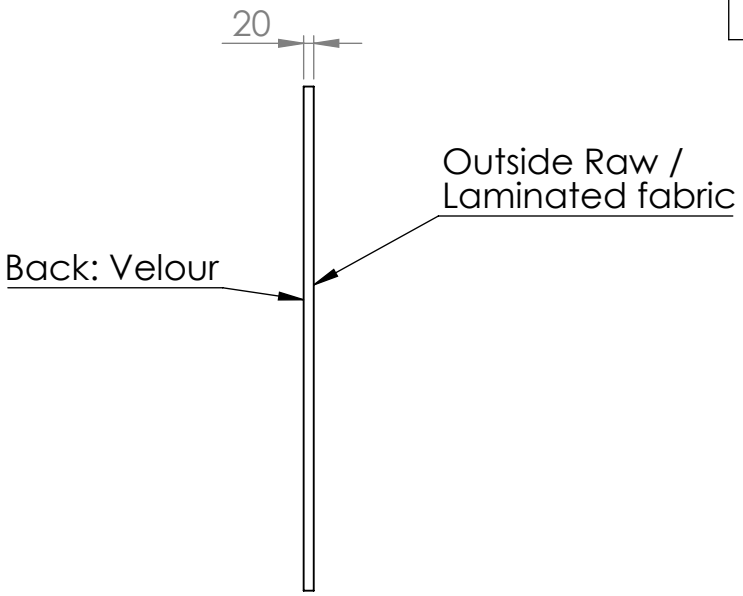

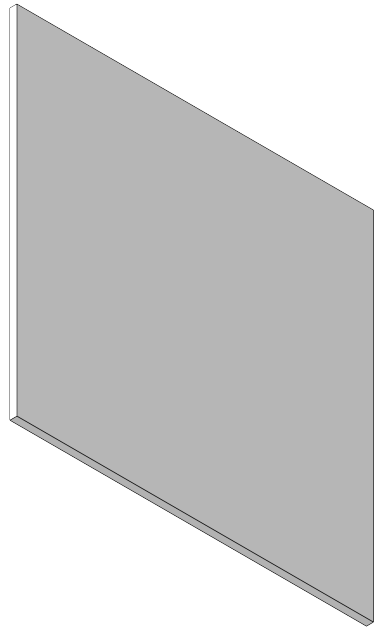

Kardborre platta (ingår) /
Including hook and loop
tape plate (x4)

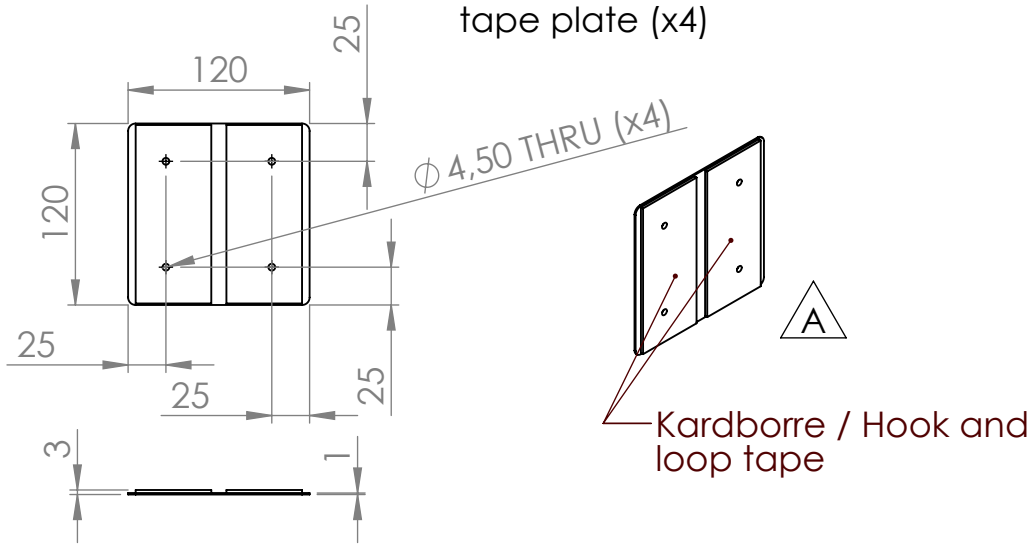

GÖTESSONS

Art.nr.	Name
125414 & 125415	Sound Off Square EcoSUND 1000x1000x20 mm wall

View placement	General tolerance	Material
	SS-ISO 2768-1 m	EcoSUND

THIS DRAWING AND INFORMATION CONTAINED HERIN ARE THE PROPERTY OF GÖTESSONS DESIGN GROUP AB AND SHALL BE RETURNED UPON DEMAND AND SHALL NOT BE REPRODUCED IN WHOLE OR IN PART TO ANYONE ELSE OR USED WITHOUT WRITTEN CONSENT OF GÖTESSONS DESIGN GROUP AB

Rev	Format	Scale	Page
A	A4	1:15	1/1

REVISIONS			
REV.	DESCRIPTION	DATE	BY
A	Drawing was made	2024-05-13	Tolle

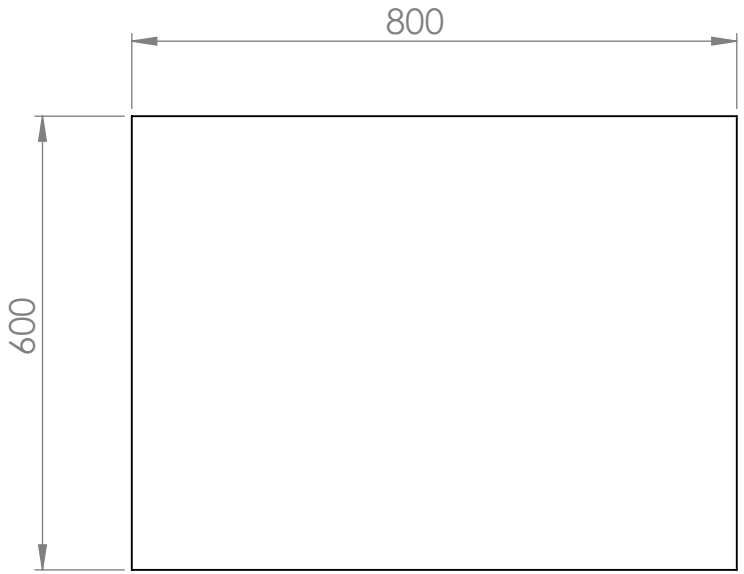

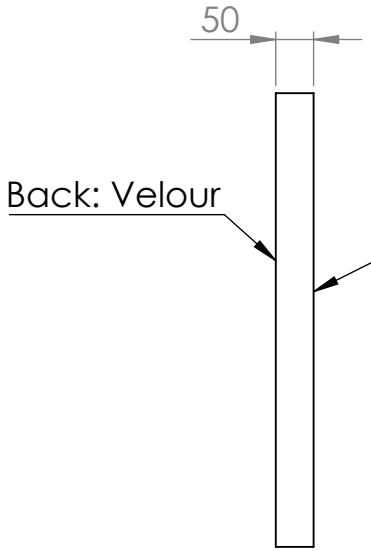

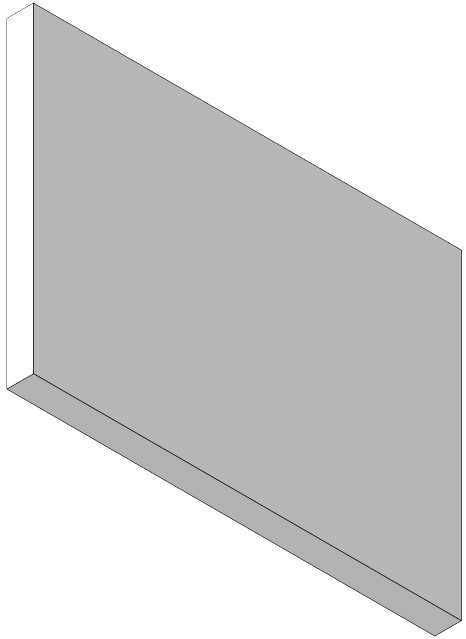

Kardborre platta (ingår) /
Including hook and loop
tape plate (x4)

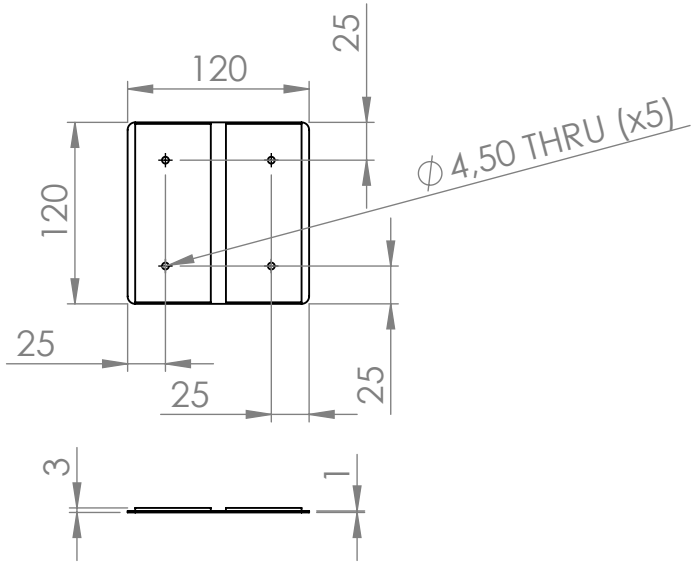

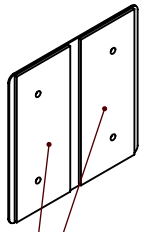

Kardborre / Hook and
loop tape

GÖTESSONS

Art.nr.	Name
125396 & 125397	Sound Off Rectangular EcoSUND 800x600x50 mm wall

View placement	General tolerance	Material
	SS-ISO 2768-1 m	EcoSUND

THIS DRAWING AND INFORMATION CONTAINED HERIN ARE THE PROPERTY OF GÖTESSONS DESIGN GROUP AB AND SHALL BE RETURNED UPON DEMAND AND SHALL NOT BE REPRODUCED IN WHOLE OR IN PART TO ANYONE ELSE OR USED WITHOUT WRITTEN CONSENT OF GÖTESSONS DESIGN GROUP AB

Rev	Format	Scale	Page
A	A4	1:10	1/1

REVISIONS			
REV.	DESCRIPTION	DATE	BY
A	Drawing was made	2024-05-13	Tolle

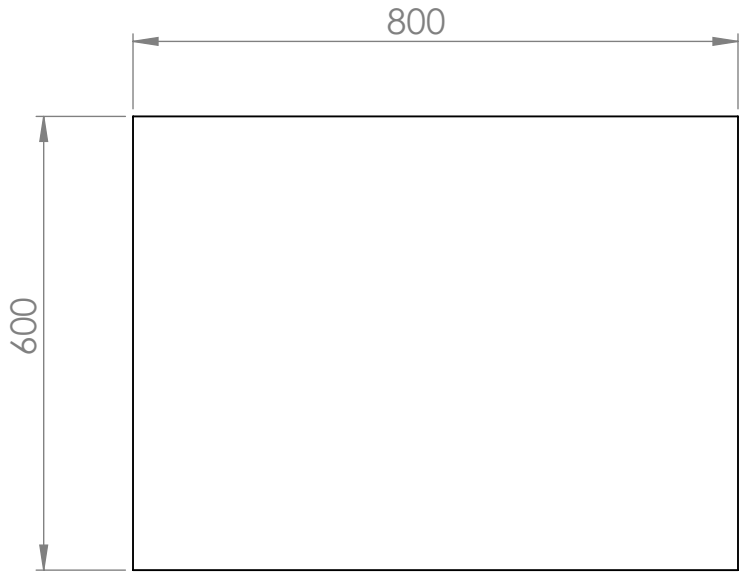

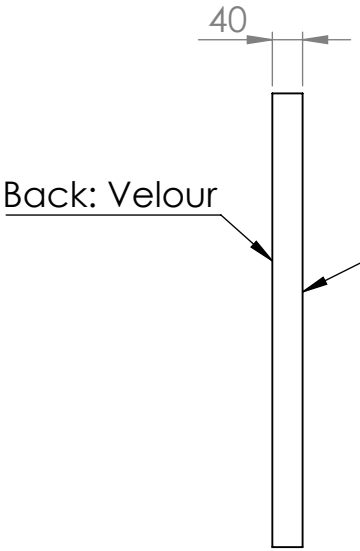

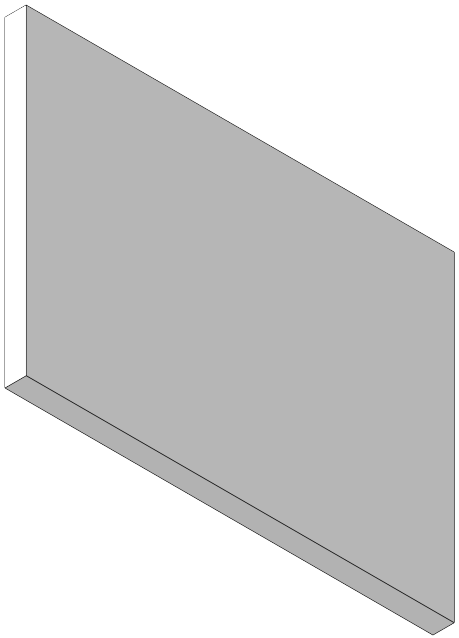

Kardborre platta (ingår) /
Including hook and loop
tape plate (x4)

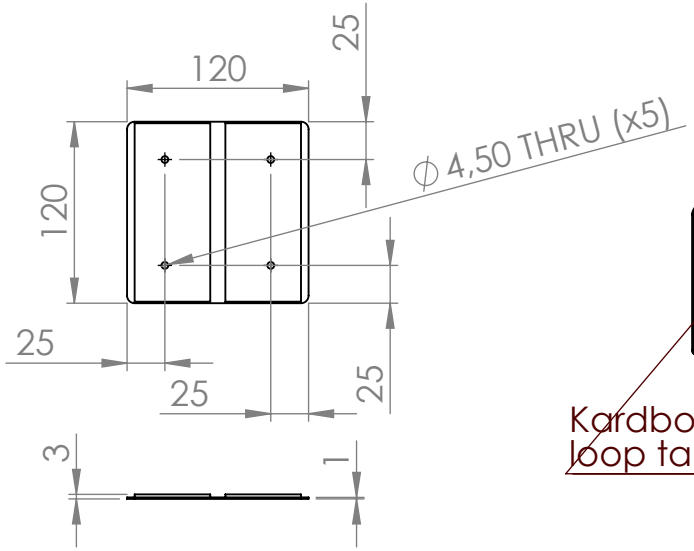

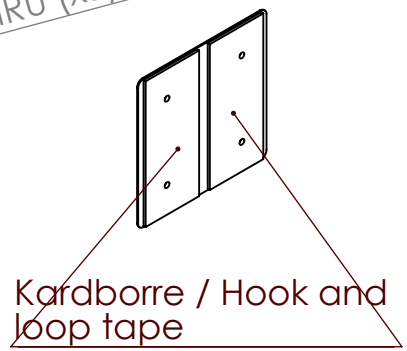

GÖTESSONS

Art.nr.	Name
125422 & 125423	Sound Off Rectangular EcoSUND 800x600x40 mm wall

View placement	General tolerance	Material
	SS-ISO 2768-1 m	EcoSUND

THIS DRAWING AND INFORMATION CONTAINED HERIN ARE THE PROPERTY OF GÖTESSONS DESIGN GROUP AB AND SHALL BE RETURNED UPON DEMAND AND SHALL NOT BE REPRODUCED IN WHOLE OR IN PART TO ANYONE ELSE OR USED WITHOUT WRITTEN CONSENT OF GÖTESSONS DESIGN GROUP AB

Rev	Format	Scale	Page
A	A4	1:10	1/1

REVISIONS		
REV.	DESCRIPTION	DATE
A	4 holes are added	2024-05-13

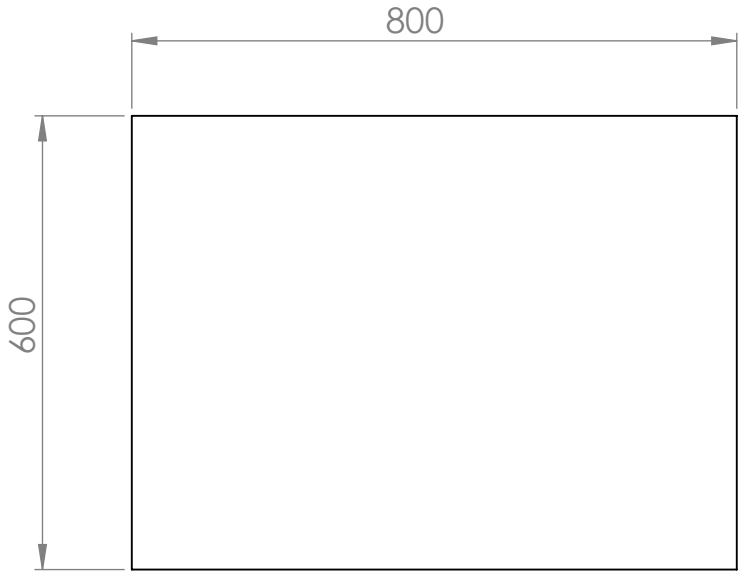

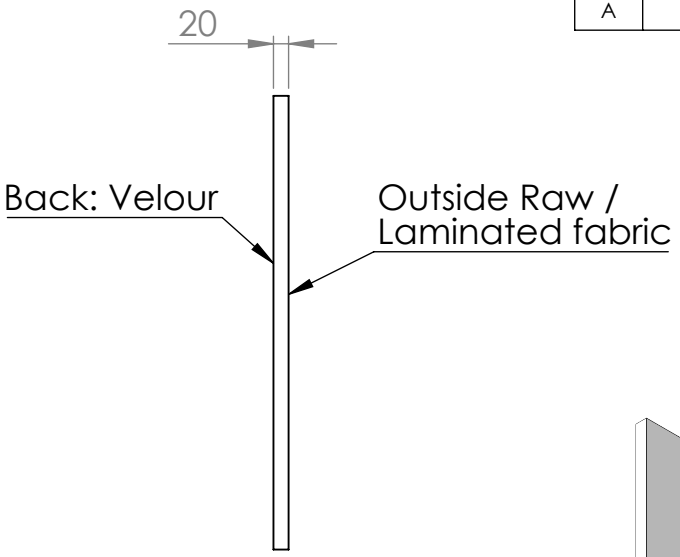

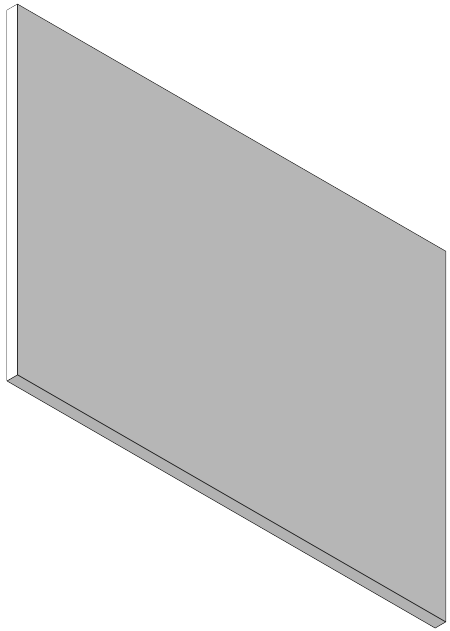

Kardborre platta (ingår) /
Including hook and loop
tape plate (x4)

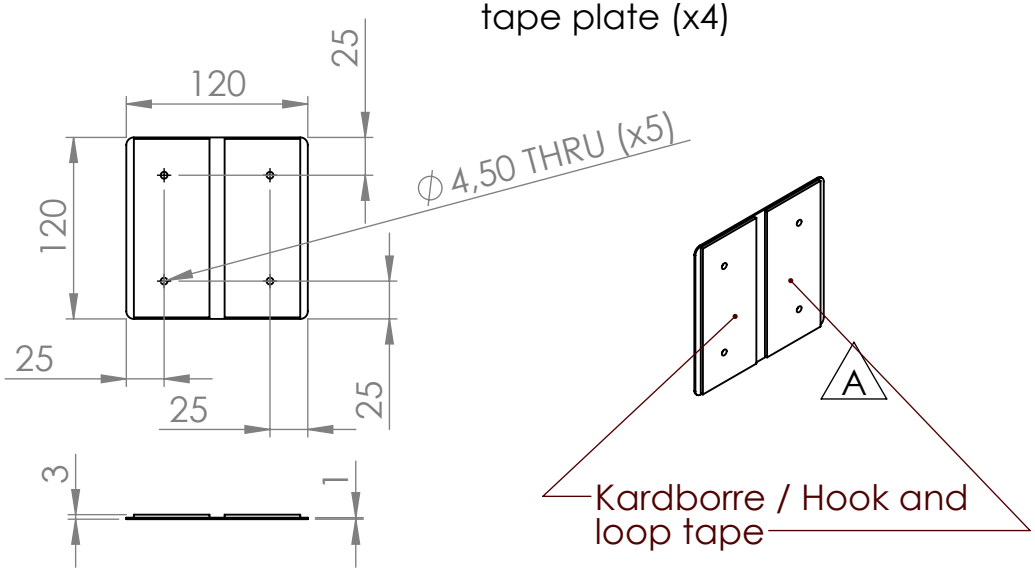

GÖTESSONS

Art.nr.	Name
125424 & 125425	Sound Off Rectangular EcoSUND 800x600x20 mm wall

View placement	General tolerance	Material
	SS-ISO 2768-1 m	EcoSUND

THIS DRAWING AND INFORMATION CONTAINED HERIN ARE THE PROPERTY OF GÖTESSONS DESIGN GROUP AB AND SHALL BE RETURNED UPON DEMAND AND SHALL NOT BE REPRODUCED IN WHOLE OR IN PART TO ANYONE ELSE OR USED WITHOUT WRITTEN CONSENT OF GÖTESSONS DESIGN GROUP AB

Rev	Format	Scale	Page
A	A4	1:10	1/1

REVISIONS			
REV.	DESCRIPTION	DATE	BY
A	Drawing was made	2024-05-13	Tolle

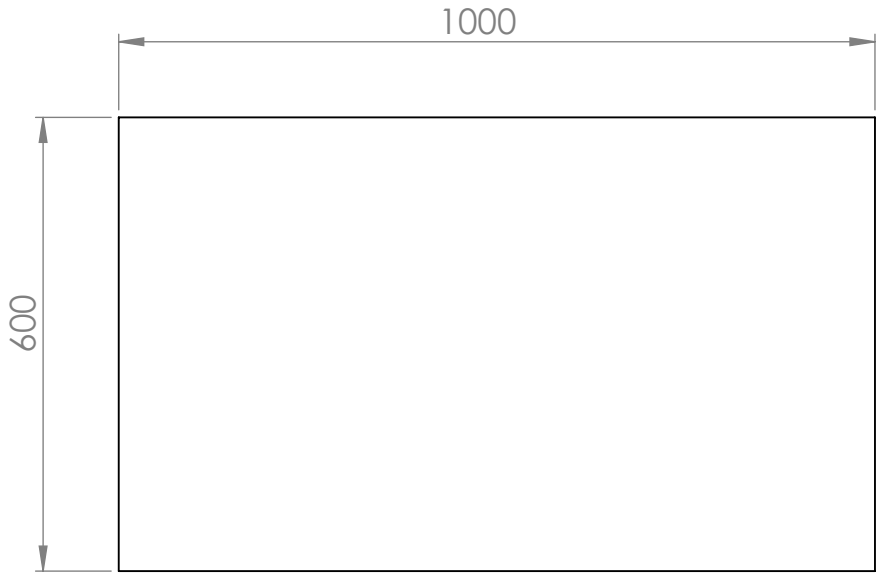

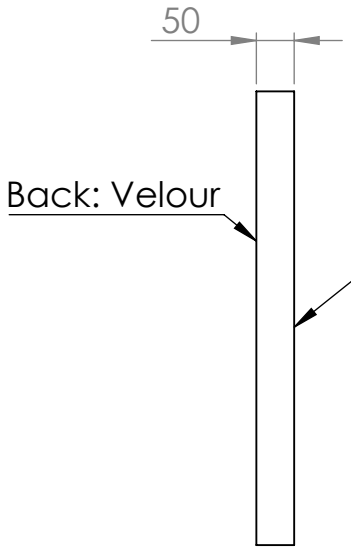

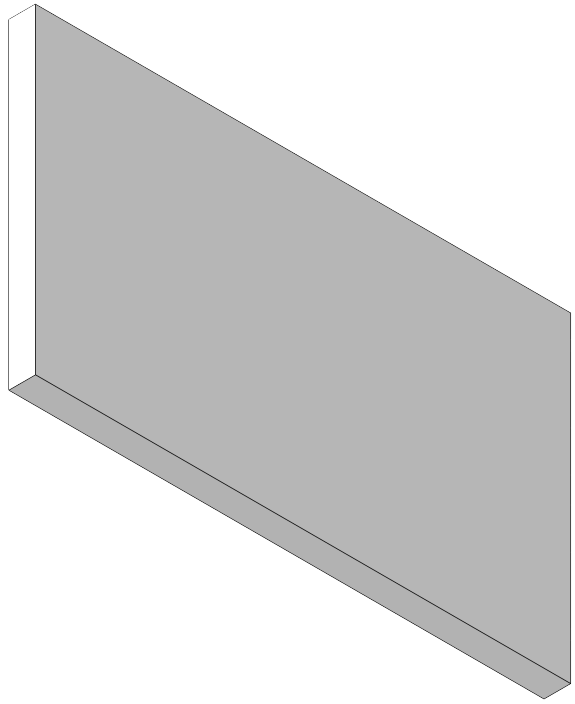

Kardborre platta (ingår) /
Including hook and loop
tape plate (x4)

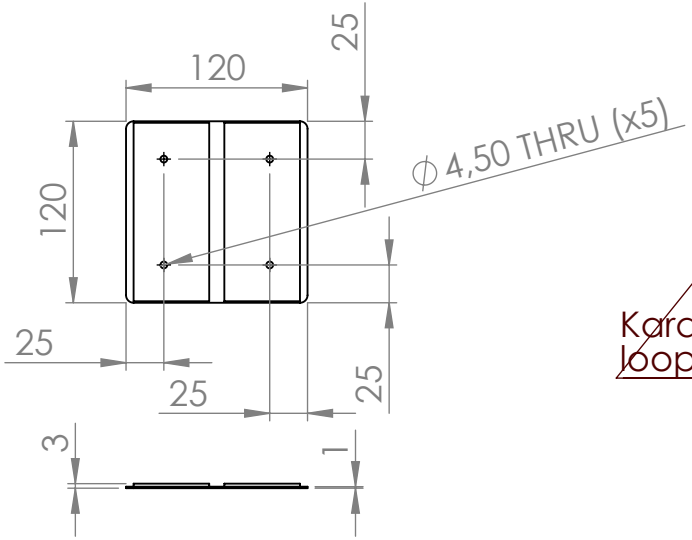

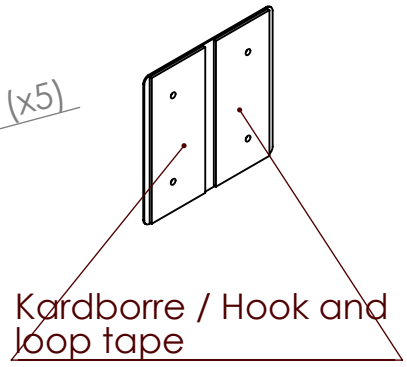

GÖTESSONS

Art.nr.	Name
125398 & 125399	Sound Off Rectangular EcoSUND 1000x600x50 mm wall

View placement	General tolerance	Material
	SS-ISO 2768-1 m	EcoSUND

THIS DRAWING AND INFORMATION CONTAINED HERIN ARE THE PROPERTY OF GÖTESSONS DESIGN GROUP AB AND SHALL BE RETURNED UPON DEMAND AND SHALL NOT BE REPRODUCED IN WHOLE OR IN PART TO ANYONE ELSE OR USED WITHOUT WRITTEN CONSENT OF GÖTESSONS DESIGN GROUP AB

Rev	Format	Scale	Page
A	A4	1:10	1/1

REVISIONS			
REV.	DESCRIPTION	DATE	BY
A	Drawing was made	2024-05-13	Tolle

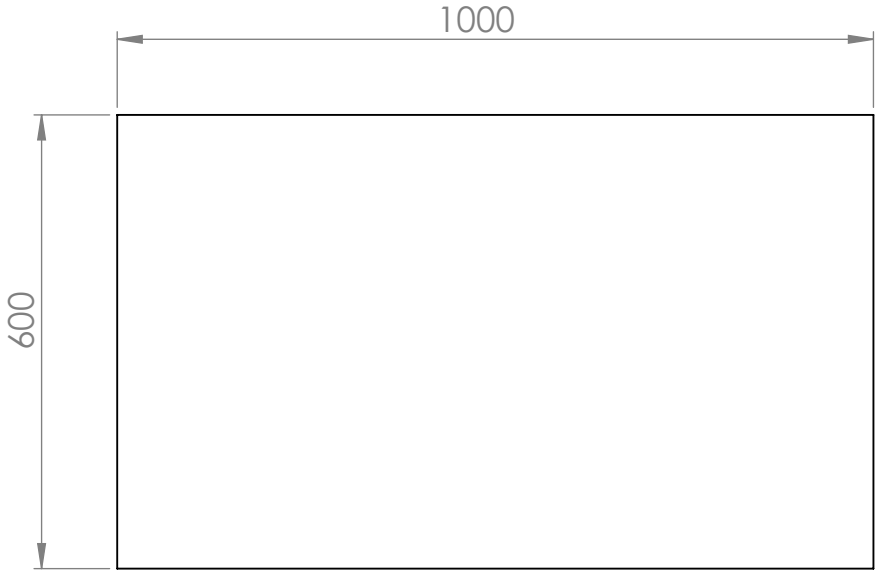

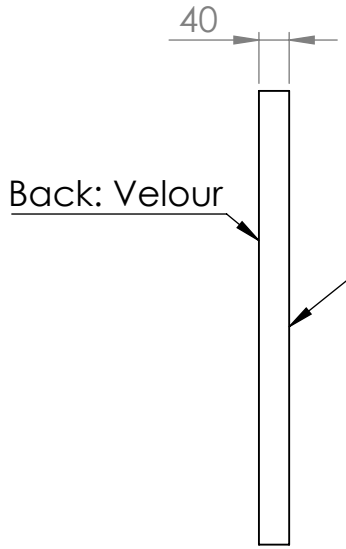

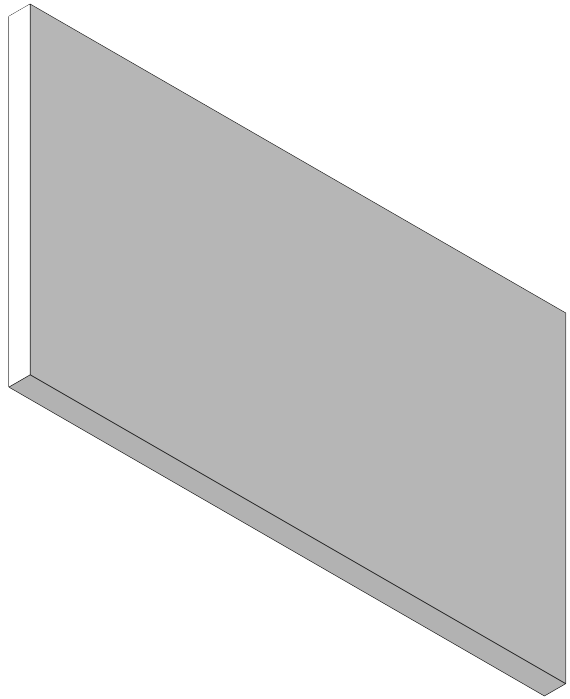

Kardborre platta (ingår) /
Including hook and loop
tape plate (x4)

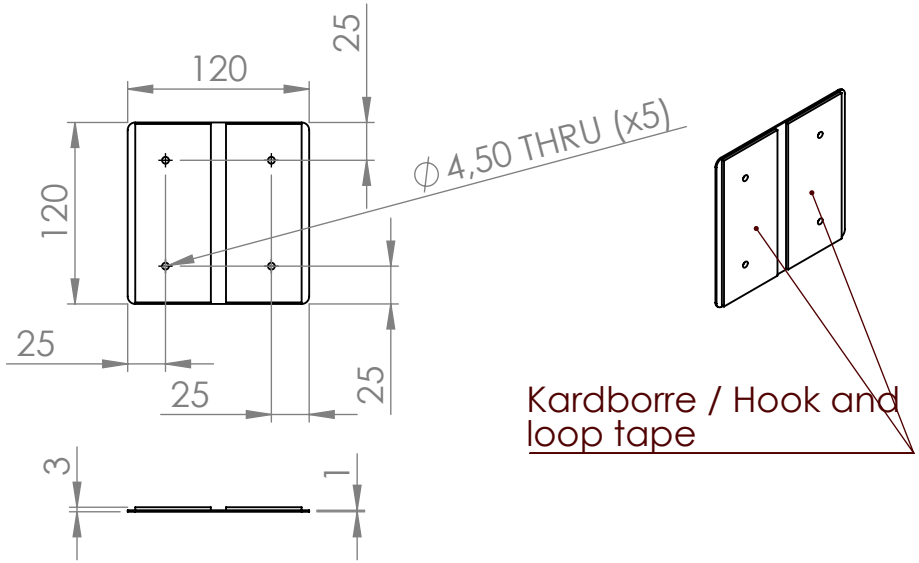

Kardborre / Hook and
loop tape

GÖTESSONS

Art.nr.	Name
125426 & 125427	Sound Off Rectangular EcoSUND 1000x600x40 mm wall

View placement	General tolerance	Material
	SS-ISO 2768-1 m	EcoSUND

THIS DRAWING AND INFORMATION CONTAINED HERIN ARE THE PROPERTY OF GÖTESSONS DESIGN GROUP AB AND SHALL BE RETURNED UPON DEMAND AND SHALL NOT BE REPRODUCED IN WHOLE OR IN PART TO ANYONE ELSE OR USED WITHOUT WRITTEN CONSENT OF GÖTESSONS DESIGN GROUP AB

Rev	Format	Scale	Page
A	A4	1:10	1/1

REVISIONS		
REV.	DESCRIPTION	DATE
A	4 holes are added	2024-05-13

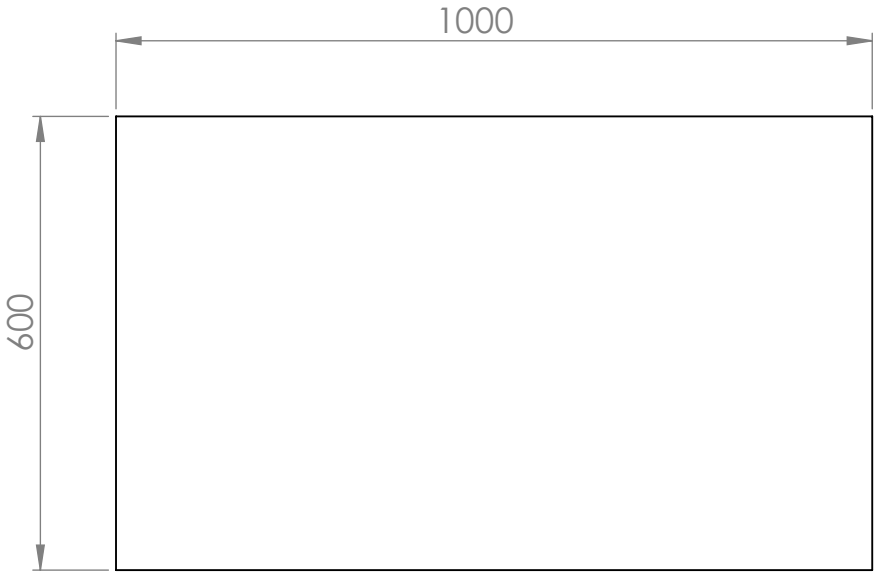

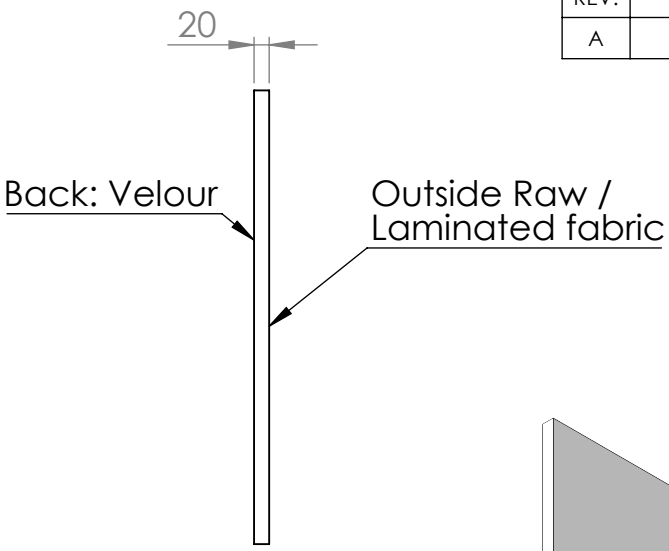

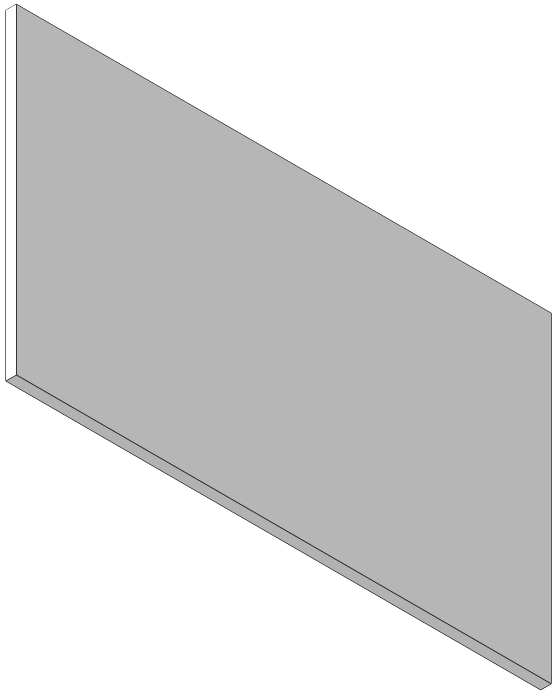

Kardborre platta (ingår) /
Including hook and loop
tape plate (x4)

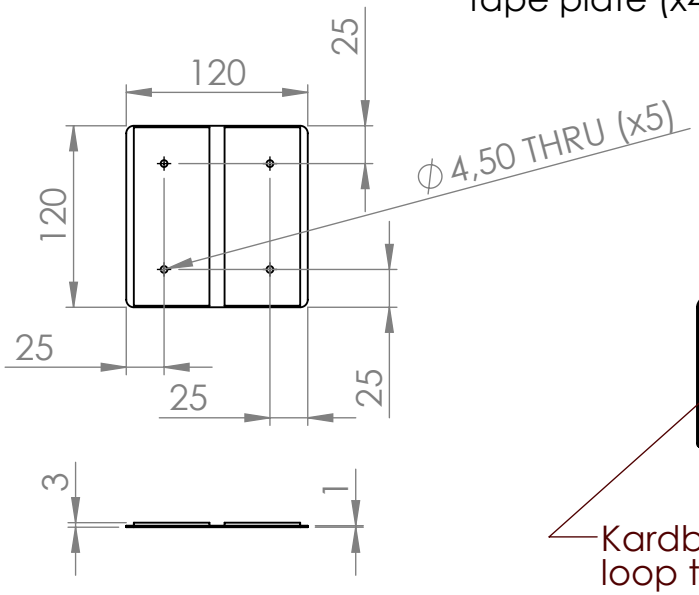



GÖTESSONS

Art.nr. 125428 & 125429	Name Sound Off Rectangular EcoSUND 1000x600x20 mm wall
View placement General tolerance SS-ISO 2768-1 m	Material EcoSUND
THIS DRAWING AND INFORMATION CONTAINED HERIN ARE THE PROPERTY OF GÖTESSONS DESIGN GROUP AB AND SHALL BE RETURNED UPON DEMAND AND SHALL NOT BE REPRODUCED IN WHOLE OR IN PART TO ANYONE ELSE WITHOUT WRITTEN CONSENT OF GÖTESSONS DESIGN GROUP AB.	Rev A 4 holes are added Format A4 Scale 1:10 Page 1/1

REVISIONS			
REV.	DESCRIPTION	DATE	BY
A	Drawing was made	2024-05-13	Tolle



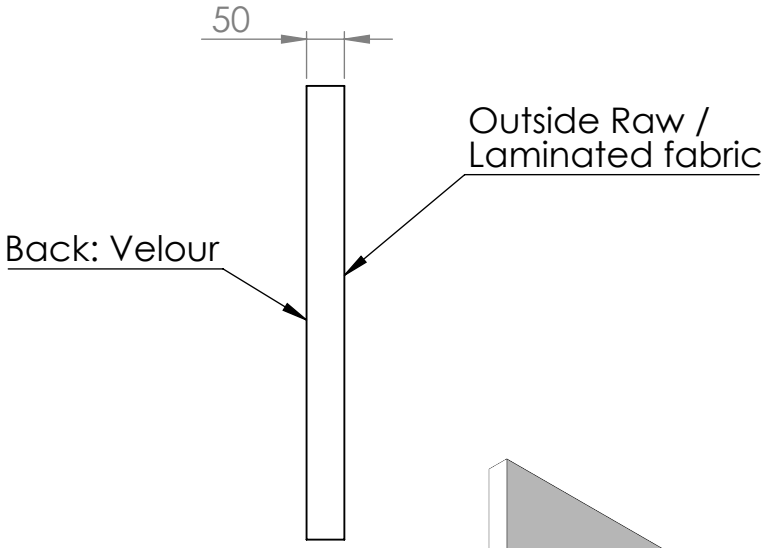

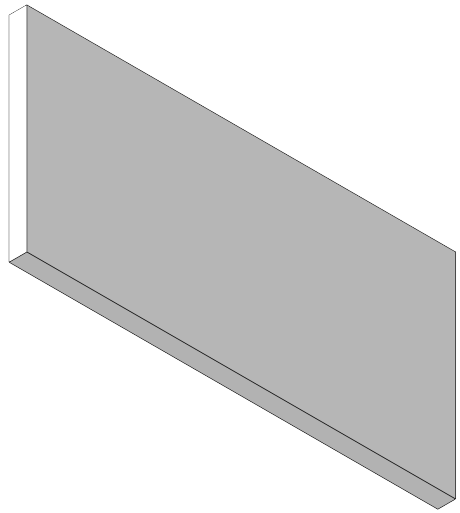

Kardborre platta (ingår) /
Including hook and loop
tape plate (x4)

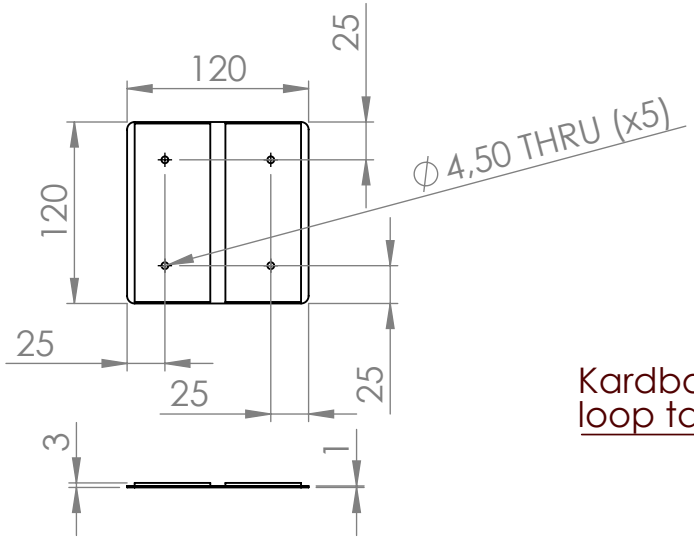

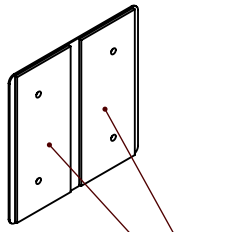

Kardborre / Hook and
loop tape

GÖTESSONS

Art.nr.	Name
125400 & 125401	Sound Off Rectangular EcoSUND 1200x600x50 mm wall

View placement	General tolerance	Material
	SS-ISO 2768-1 m	EcoSUND

THIS DRAWING AND INFORMATION CONTAINED HERIN ARE THE PROPERTY OF GÖTESSONS DESIGN GROUP AB AND SHALL BE RETURNED UPON DEMAND AND SHALL NOT BE REPRODUCED IN WHOLE OR IN PART TO ANYONE ELSE OR USED WITHOUT WRITTEN CONSENT OF GÖTESSONS DESIGN GROUP AB

Rev	Format	Scale	Page
A	A4	1:10	1/1

REVISIONS			
REV.	DESCRIPTION	DATE	BY
A	Drawing was made	2024-05-13	Tolle



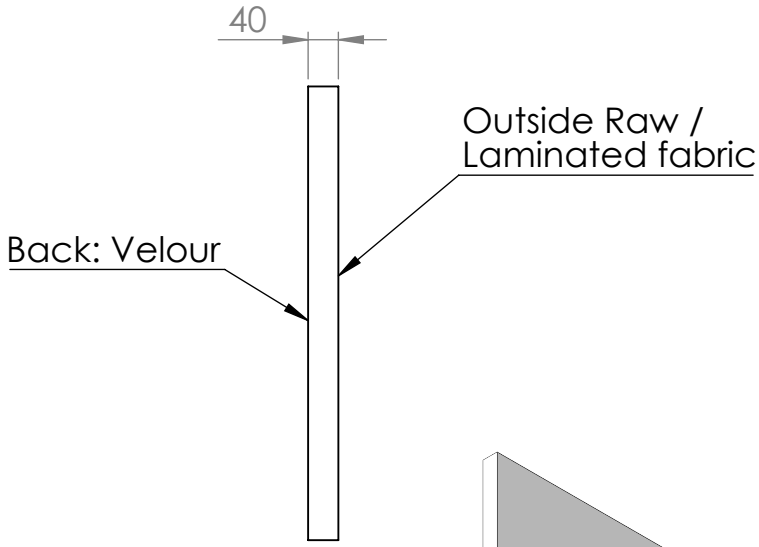

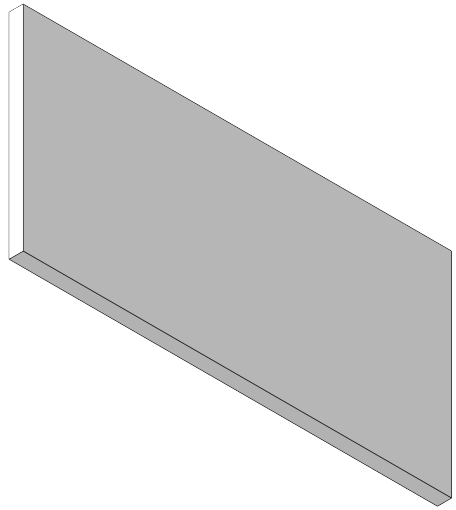

Kardborre platta (ingår) /
Including hook and loop
tape plate (x4)

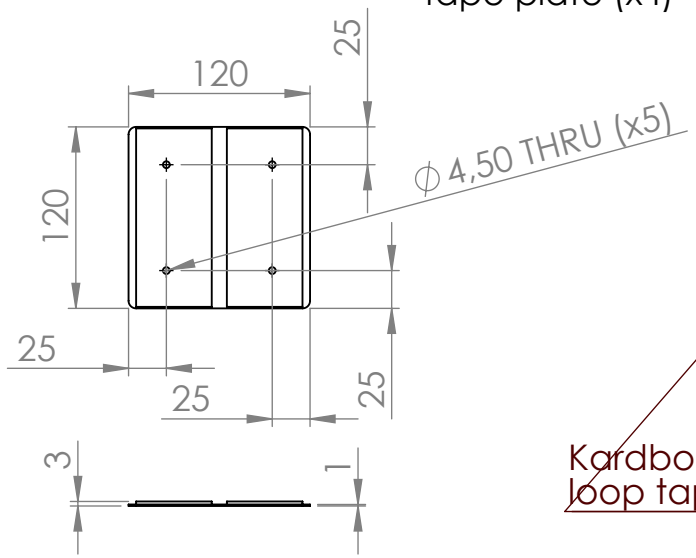

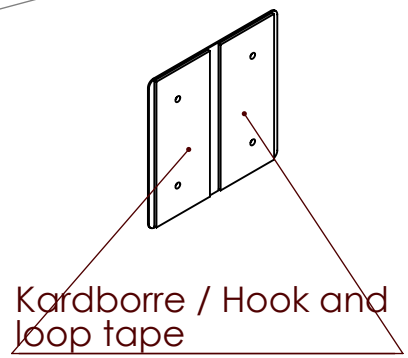

GÖTESSONS

Art.nr. 125430 & 125431	Name Sound Off Rectangular EcoSUND 1200x600x40 mm wall
View placement / General tolerance SS-ISO 2768-1 m	Material EcoSUND

THIS DRAWING AND INFORMATION CONTAINED HERIN ARE THE PROPERTY OF GÖTESSONS DESIGN GROUP AB AND SHALL BE RETURNED UPON DEMAND AND SHALL NOT BE REPRODUCED IN WHOLE OR IN PART TO ANYONE ELSE OR USED WITHOUT WRITTEN CONSENT OF GÖTESSONS DESIGN GROUP AB

Rev	Format	Scale	Page
A	A4	1:10	1/1

REVISIONS		
REV.	DESCRIPTION	DATE
A	4 holes are added	2024-05-13



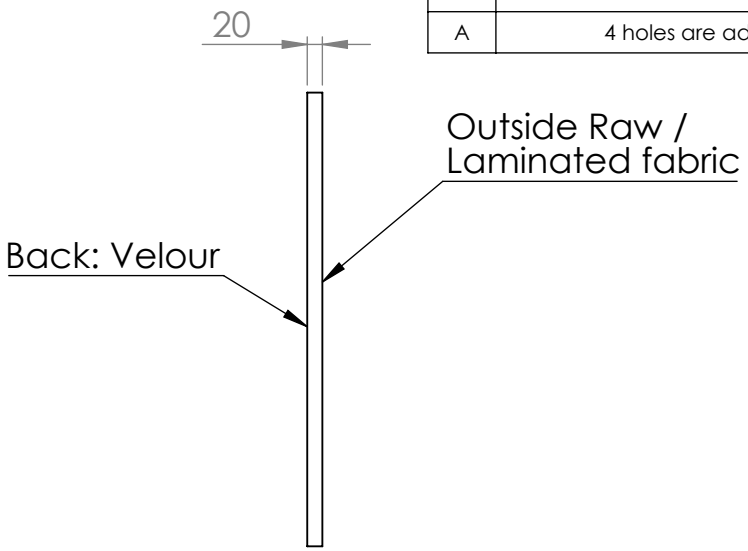

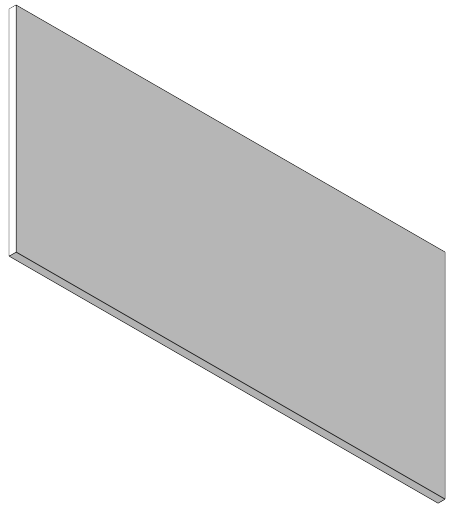

Kardborre platta (ingår) /
Including hook and loop
tape plate (x4)

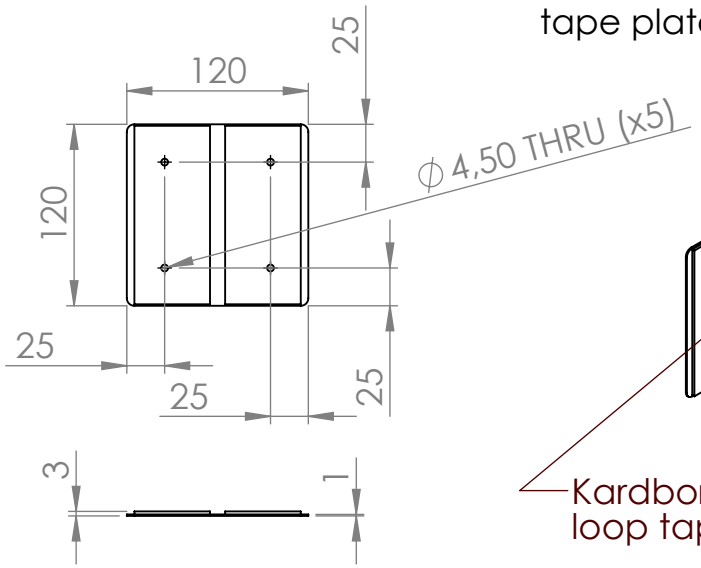

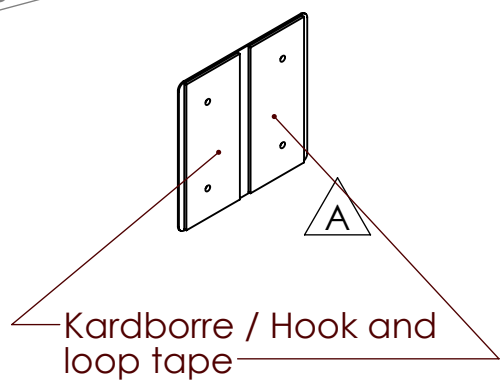

GÖTESSONS

Art.nr.	Name
125432 & 125433	Sound Off Rectangular EcoSUND 1200x600x20 mm wall

View placement	General tolerance	Material
	SS-ISO 2768-1 m	EcoSUND

THIS DRAWING AND INFORMATION CONTAINED HERIN ARE THE PROPERTY OF GÖTESSONS DESIGN GROUP AB AND SHALL BE RETURNED UPON DEMAND AND SHALL NOT BE REPRODUCED IN WHOLE OR IN PART TO ANYONE ELSE OR USED WITHOUT WRITTEN CONSENT OF GÖTESSONS DESIGN GROUP AB

Rev	Format	Scale	Page
A	A4	1:10	1/1

REVISIONS			
REV.	DESCRIPTION	DATE	BY
A	Drawing was made	2024-05-13	Tolle

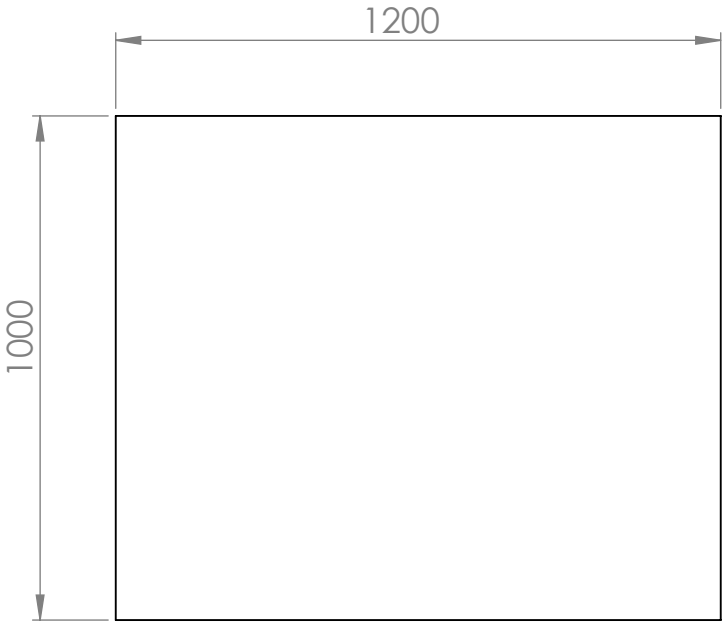

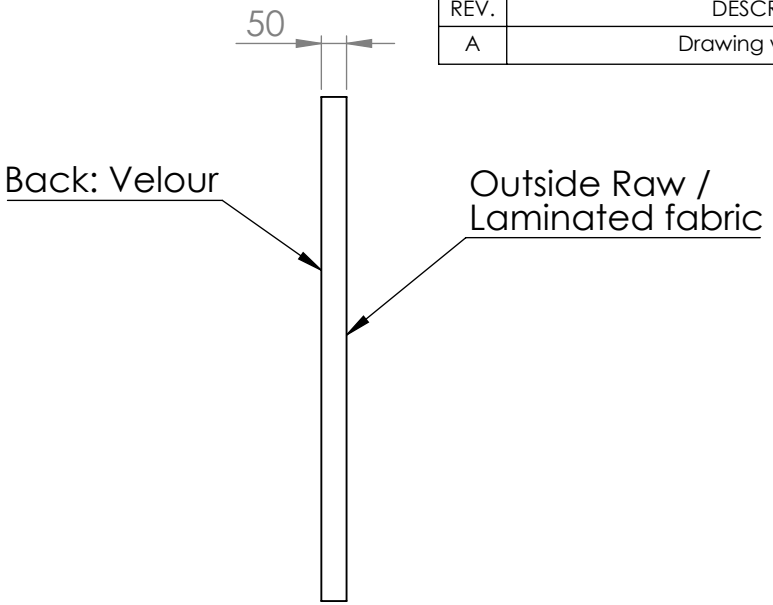

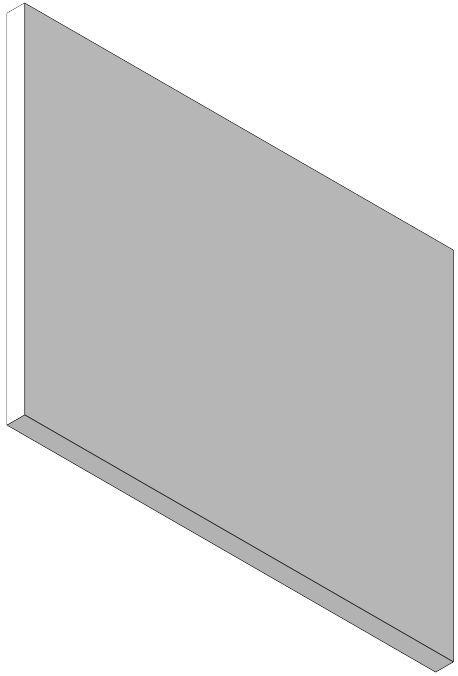

Kardborre platta (ingår) /
Including hook and loop
tape plate (x4)

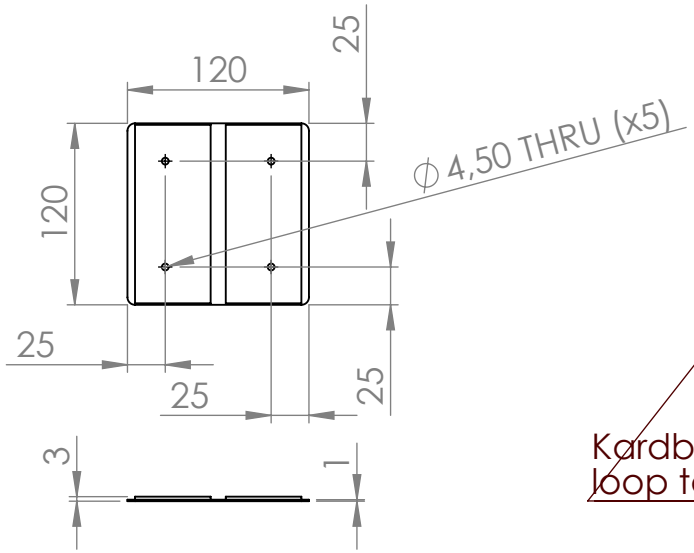

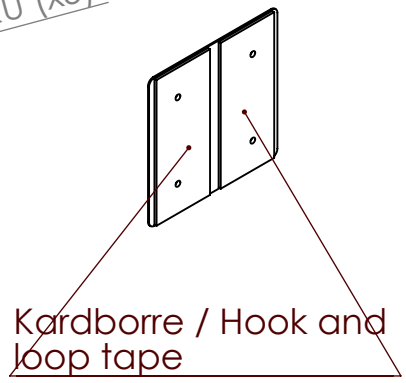

GÖTESSONS

Art.nr.	Name
125402 & 125403	Sound Off Rectangular EcoSUND 1200x1000x50 mm wall

View placement	General tolerance	Material
	SS-ISO 2768-1 m	EcoSUND

THIS DRAWING AND INFORMATION CONTAINED HERIN ARE THE PROPERTY OF GÖTESSONS DESIGN GROUP AB AND SHALL BE RETURNED UPON DEMAND AND SHALL NOT BE REPRODUCED IN WHOLE OR IN PART TO ANYONE ELSE OR USED WITHOUT WRITTEN CONSENT OF GÖTESSONS DESIGN GROUP AB

Rev	Format	Scale	Page
A	A4	1:15	1/1

REVISIONS		
REV.	DESCRIPTION	DATE
A	4 holes are added	2024-05-13

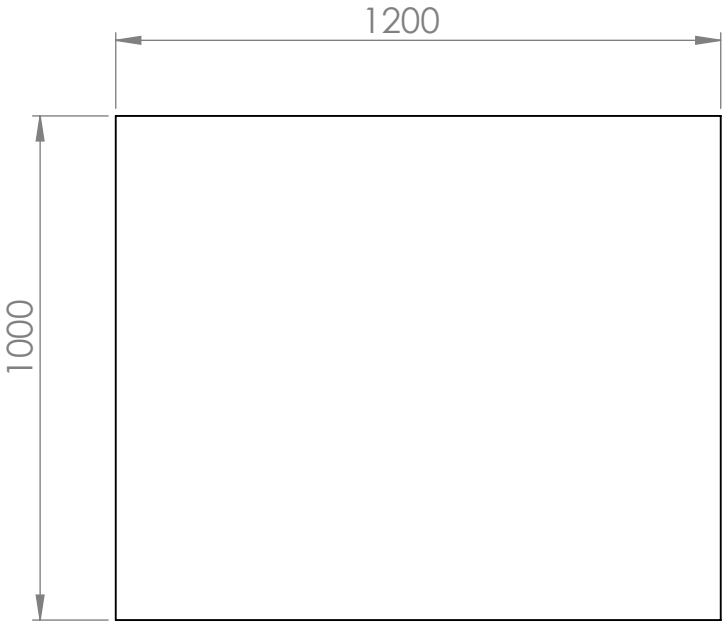

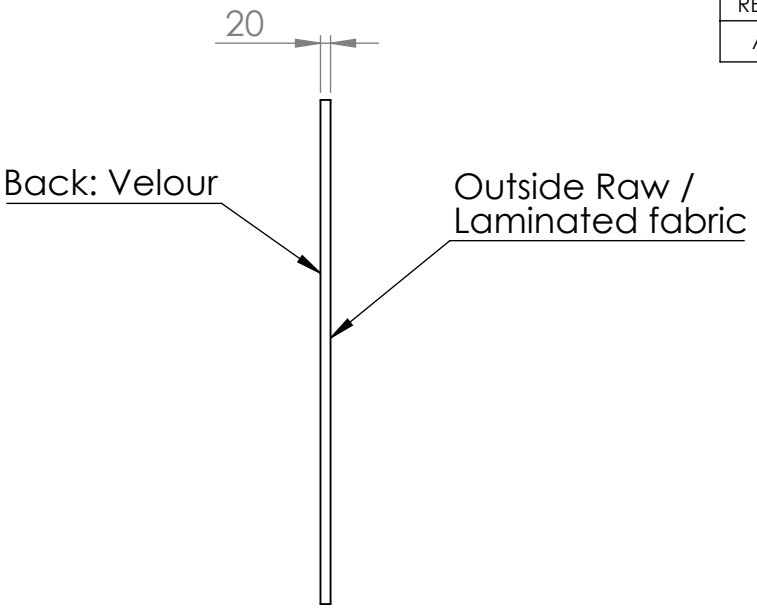

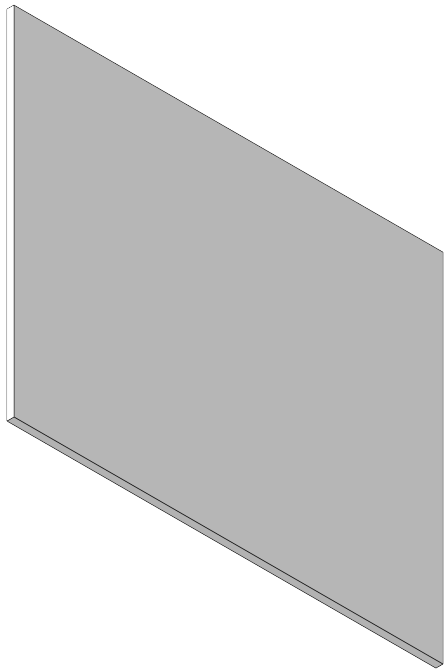

Kardborre platta (ingår) /
Including hook and loop
tape plate (x4)

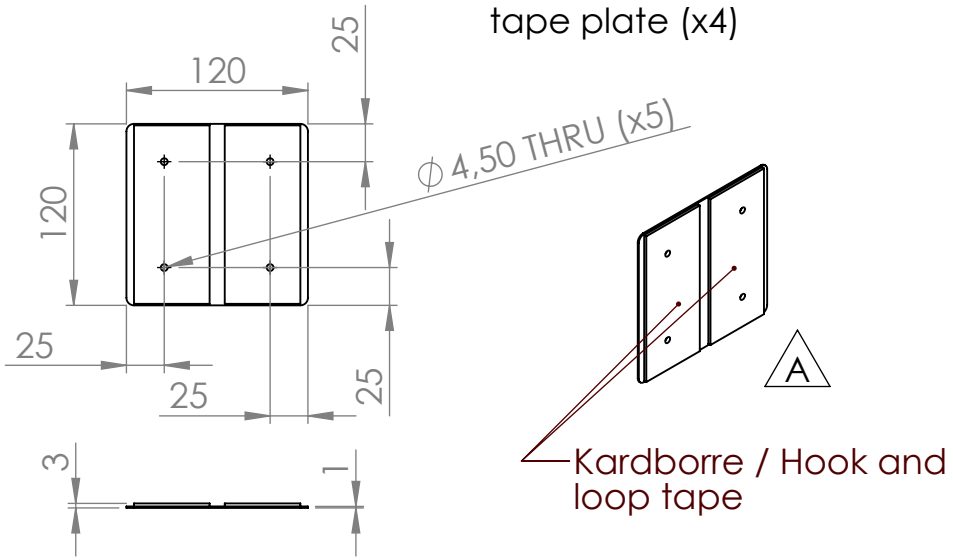

GÖTESSONS

Art.nr.	Name
125436 & 125437	Sound Off Rectangular EcoSUND 1200x1000x20 mm wall

View placement	General tolerance	Material
	SS-ISO 2768-1 m	EcoSUND

THIS DRAWING AND INFORMATION CONTAINED HERIN ARE THE PROPERTY OF GÖTESSONS DESIGN GROUP AB AND SHALL BE RETURNED UPON DEMAND AND SHALL NOT BE REPRODUCED IN WHOLE OR IN PART TO ANYONE ELSE OR USED WITHOUT WRITTEN CONSENT OF GÖTESSONS DESIGN GROUP AB

Rev	Format	Scale	Page
A	A4	1:15	1/1

REVISIONS			
REV.	DESCRIPTION	DATE	BY
A	Drawing was made	2024-05-13	Tolle

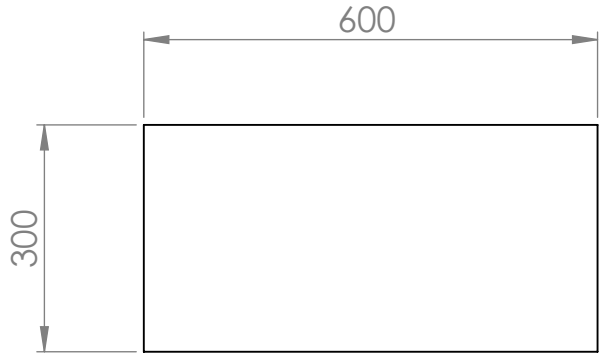

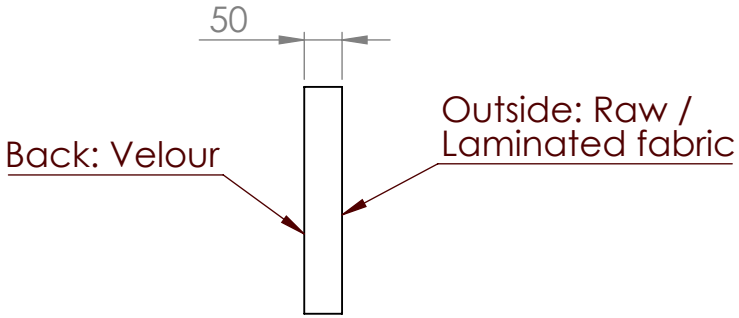

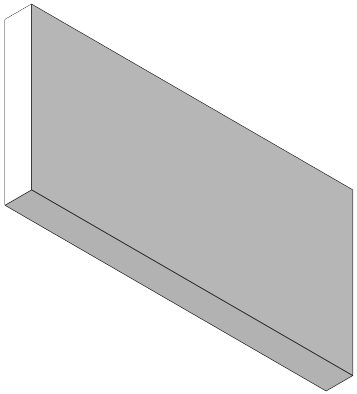

Kardborre platta (ingår) / Including hook and loop tape plate (x2)

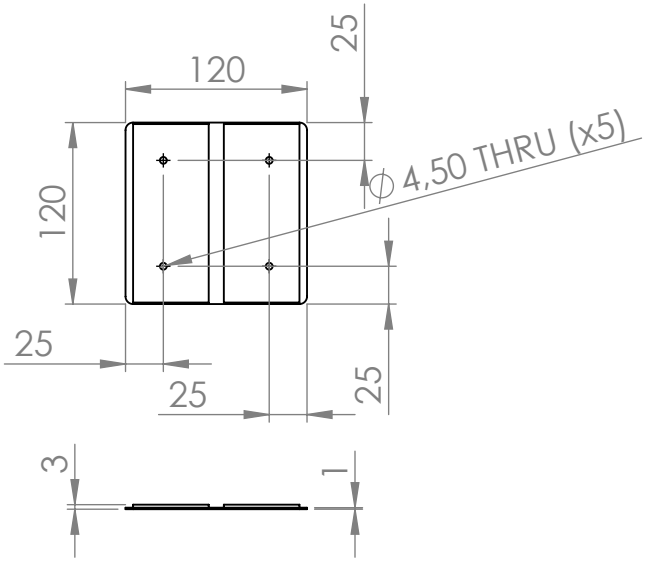

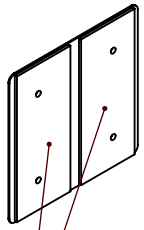

GÖTESSONS

Art.nr.	Name
125416 &125417	Sound Off Square EcoSUND 600x300x50 mm wall

View placement	General tolerance	Material
	SS-ISO 2768-1 m	EcoSUND

THIS DRAWING AND INFORMATION CONTAINED HERIN ARE THE PROPERTY OF GÖTESSONS DESIGN GROUP AB AND SHALL BE RETURNED UPON DEMAND AND SHALL NOT BE REPRODUCED IN WHOLE OR IN PART TO ANYONE ELSE OR USED WITHOUT WRITTEN CONSENT OF GÖTESSONS DESIGN GROUP AB

Rev	Format	Scale	Page
A	A4	1:10	1/1

REVISIONS			
REV.	DESCRIPTION	DATE	BY
A	Drawing was made	2024-05-13	Tolle

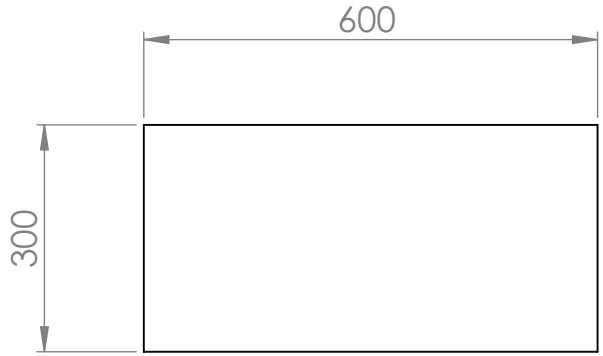

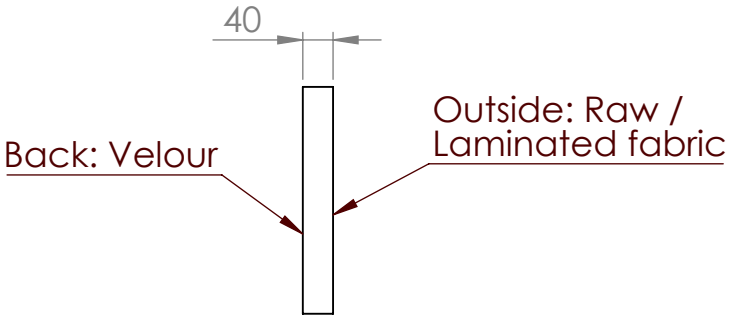

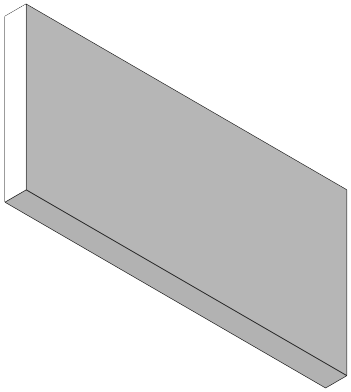

Kardborre platta (ingår) / Including hook and loop tape plate (x2)

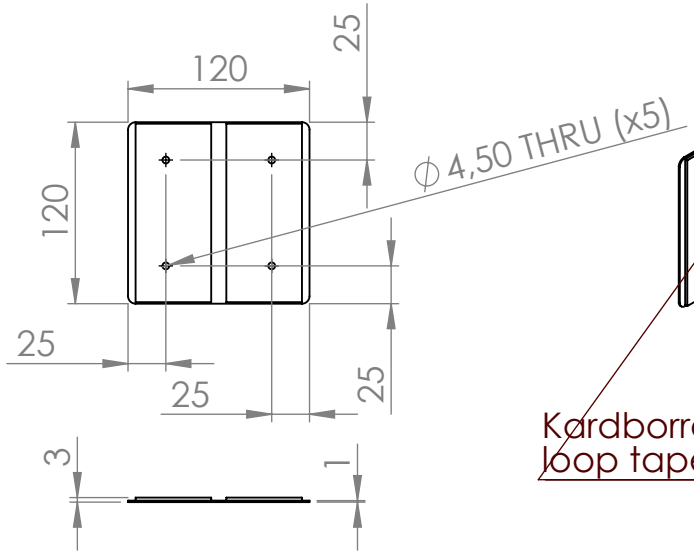

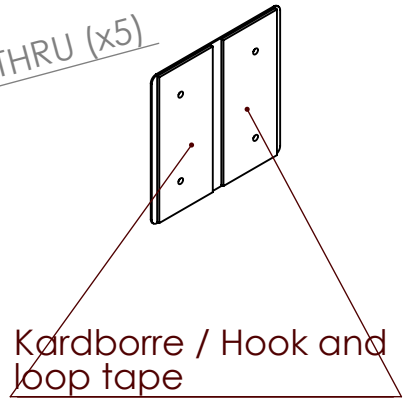

GÖTESSONS

Art.nr.	Name
125418 &125419	Sound Off Square EcoSUND 600x300x40 mm wall

View placement	General tolerance	Material
	SS-ISO 2768-1 m	EcoSUND

THIS DRAWING AND INFORMATION CONTAINED HERIN ARE THE PROPERTY OF GÖTESSONS DESIGN GROUP AB AND SHALL BE RETURNED UPON DEMAND AND SHALL NOT BE REPRODUCED IN WHOLE OR IN PART TO ANYONE ELSE OR USED WITHOUT WRITTEN CONSENT OF GÖTESSONS DESIGN GROUP AB

Rev	Format	Scale	Page
A	A4	1:10	1/1

REVISIONS		
REV.	DESCRIPTION	DATE
A	4 holes are added	2024-05-13

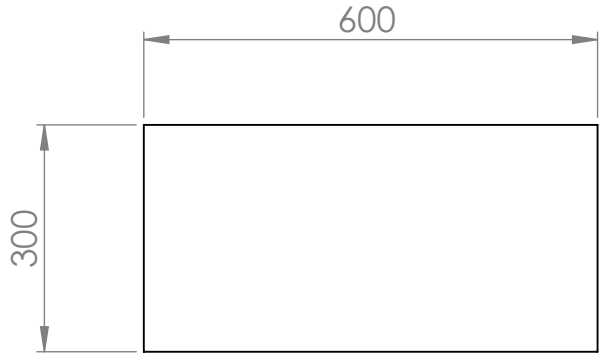

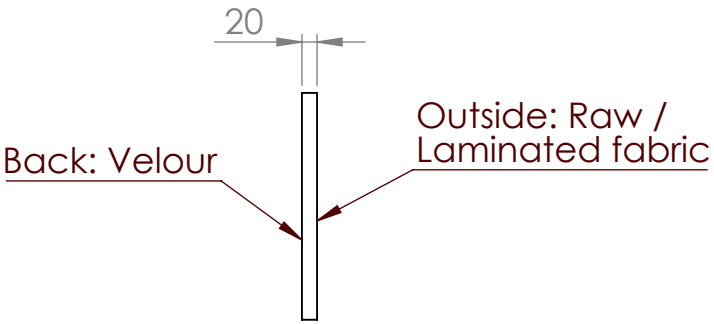

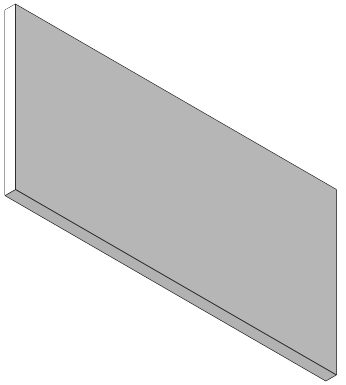

Kardborre platta (ingår) /
Including hook and loop
tape plate (x2)

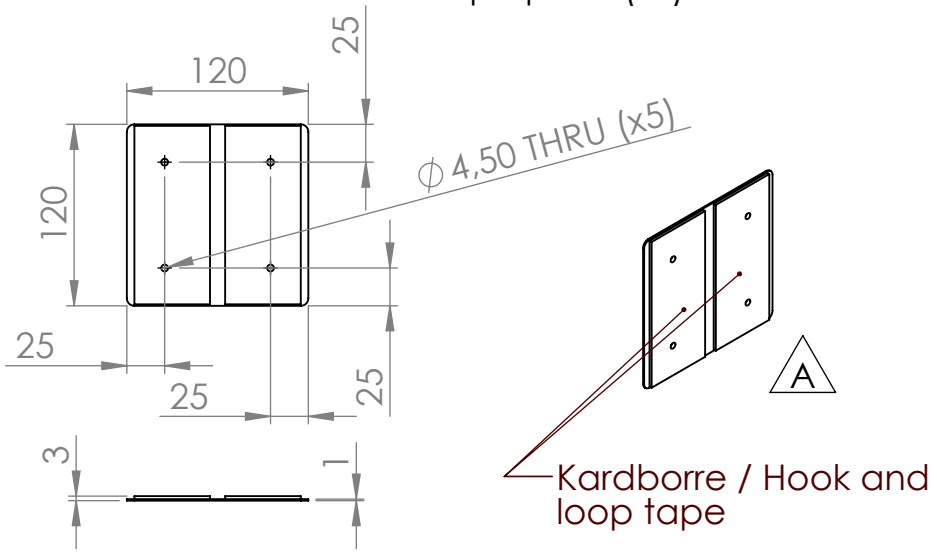

GÖTESSONS

Art.nr.	Name
125420 &125421	Sound Off Square EcoSUND 600x300x20 mm wall

View placement	General tolerance	Material
	SS-ISO 2768-1 m	EcoSUND

THIS DRAWING AND INFORMATION CONTAINED HERIN ARE THE PROPERTY OF GÖTESSONS DESIGN GROUP AB AND SHALL BE RETURNED UPON DEMAND AND SHALL NOT BE REPRODUCED IN WHOLE OR IN PART TO ANYONE ELSE OR USED WITHOUT WRITTEN CONSENT OF GÖTESSONS DESIGN GROUP AB

Rev	Format	Scale	Page
A	A4	1:10	1/1

REVISIONS			
REV.	DESCRIPTION	DATE	BY
A	Drawing was made	2024-05-13	Tolle

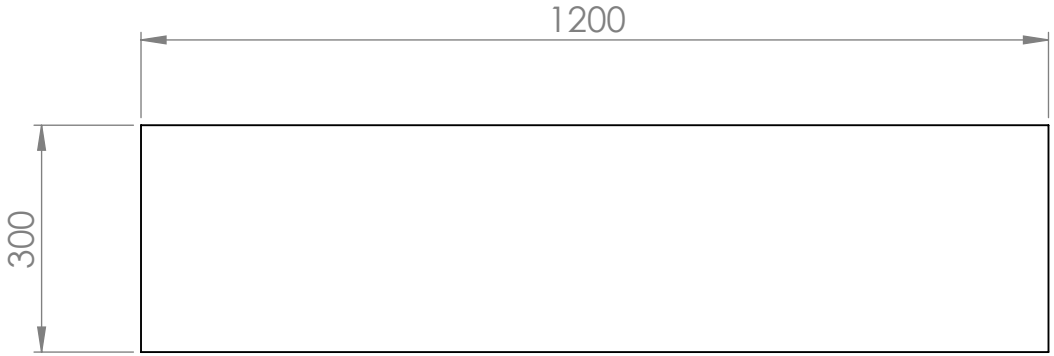

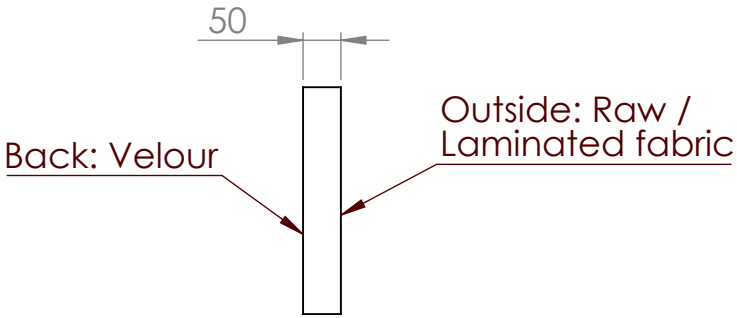

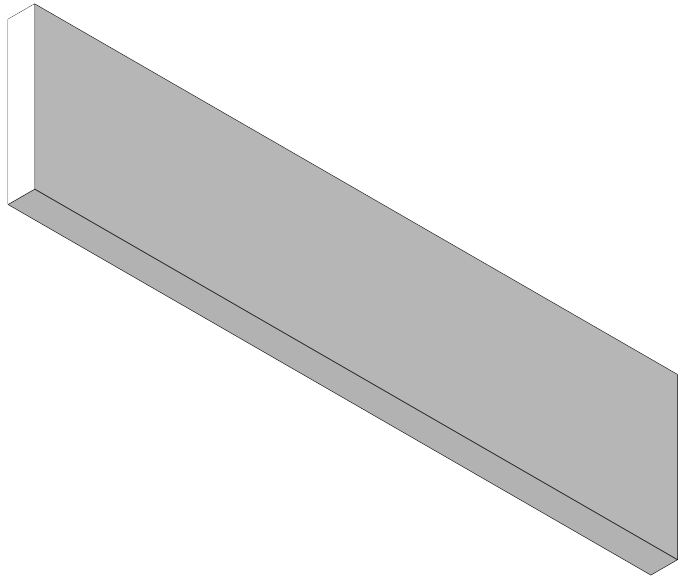

Kardborre platta (ingår) /
Including hook and loop
tape plate (x2)

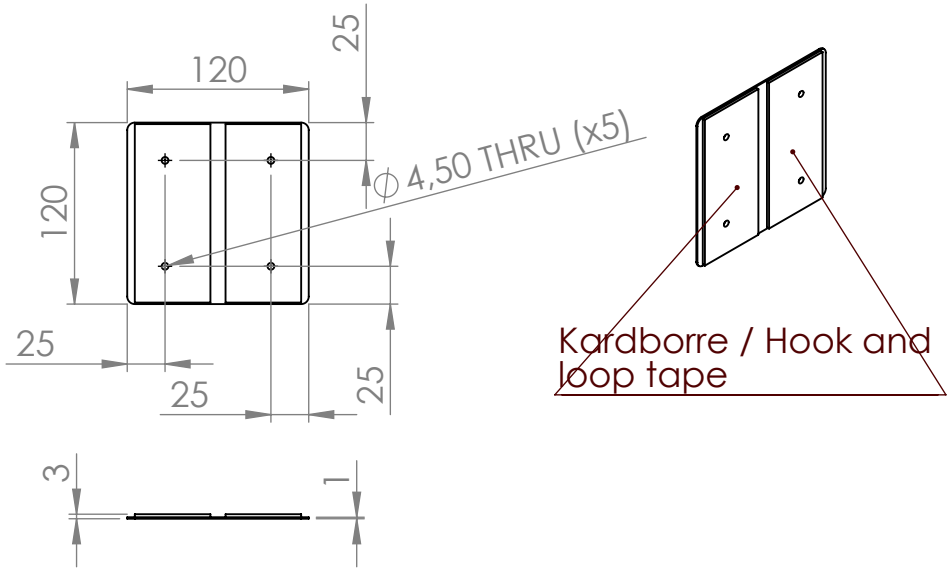

GÖTESSONS

Art.nr.	Name
125438 & 125439	Sound Off Square EcoSUND 1200x300x50 mm wall

View placement	General tolerance	Material
	SS-ISO 2768-1 m	EcoSUND

THIS DRAWING AND INFORMATION CONTAINED HERIN ARE THE PROPERTY OF GÖTESSONS DESIGN GROUP AB AND SHALL BE RETURNED UPON DEMAND AND SHALL NOT BE REPRODUCED IN WHOLE OR IN PART TO ANYONE ELSE OR USED WITHOUT WRITTEN CONSENT OF GÖTESSONS DESIGN GROUP AB

Rev	Format	Scale	Page
A	A4	1:10	1/1

REVISIONS			
REV.	DESCRIPTION	DATE	BY
A	Drawing was made	2024-05-13	Tolle

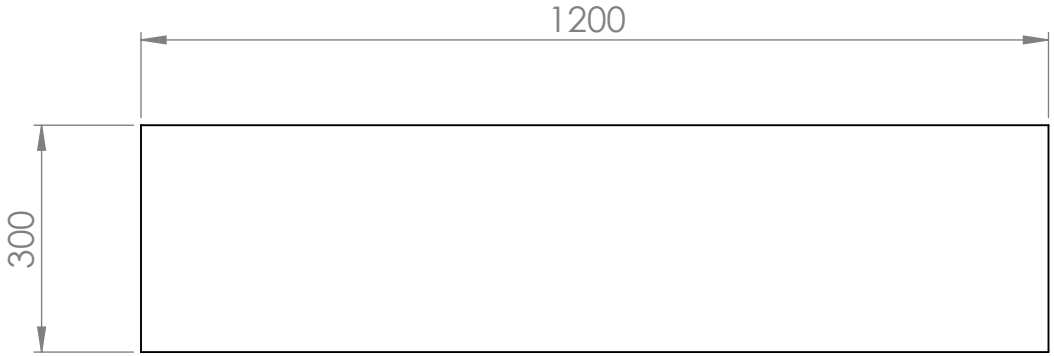

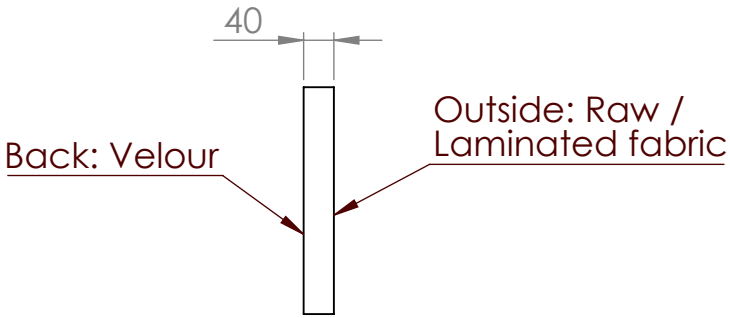

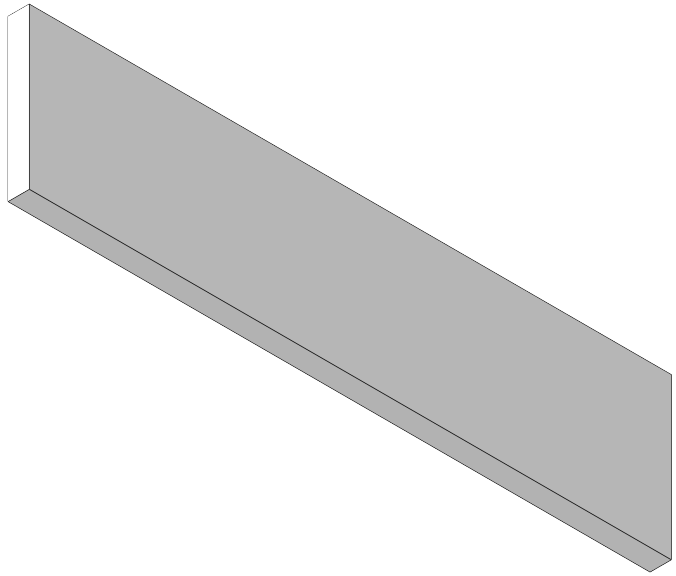

Kardborre platta (ingår) /
Including hook and loop
tape plate (x2)

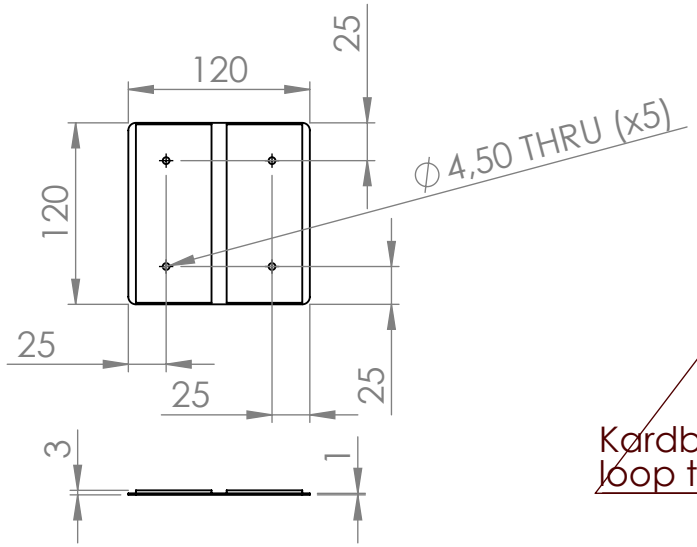

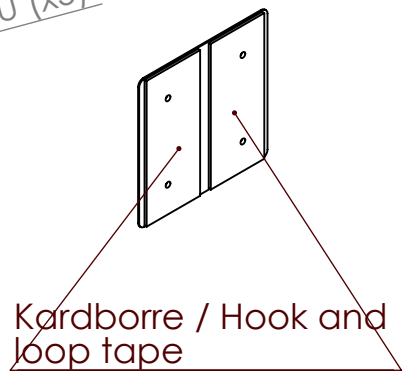

GÖTESSONS

Art.nr.	Name
125440 & 125441	Sound Off Square EcoSUND 1200x300x40 mm wall

View placement	General tolerance	Material
	SS-ISO 2768-1 m	EcoSUND

THIS DRAWING AND INFORMATION CONTAINED HERIN ARE THE PROPERTY OF GÖTESSONS DESIGN GROUP AB AND SHALL BE RETURNED UPON DEMAND AND SHALL NOT BE REPRODUCED IN WHOLE OR IN PART TO ANYONE ELSE OR USED WITHOUT WRITTEN CONSENT OF GÖTESSONS DESIGN GROUP AB

Rev	Format	Scale	Page
A	A4	1:10	1/1

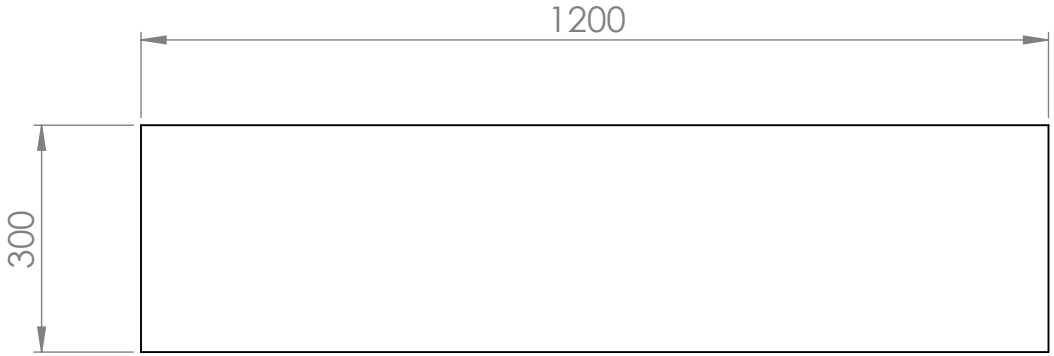

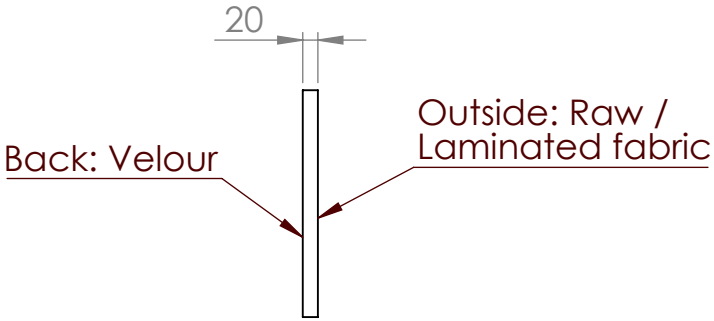

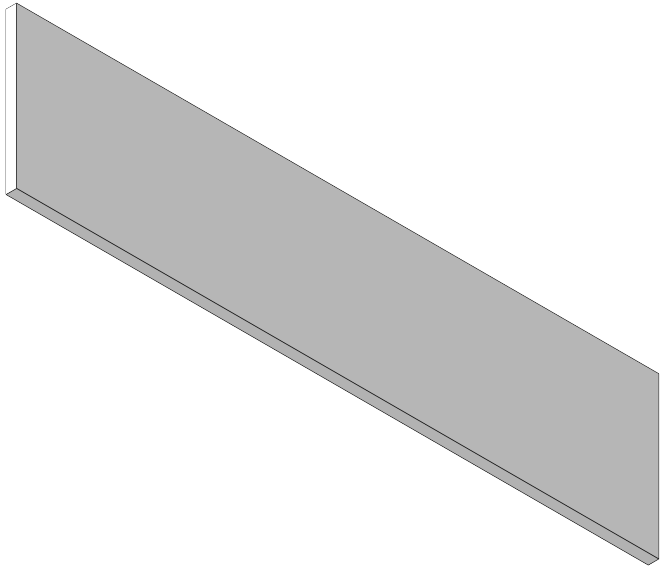

Kardborre platta (ingår) /
Including hook and loop
tape plate (x2)

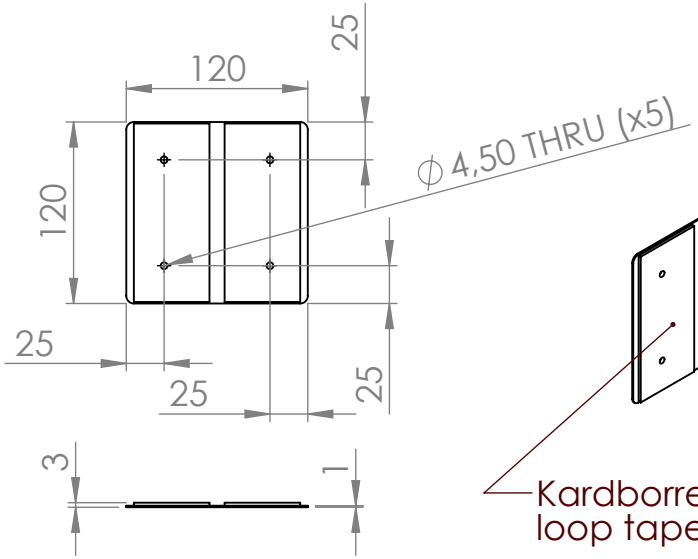

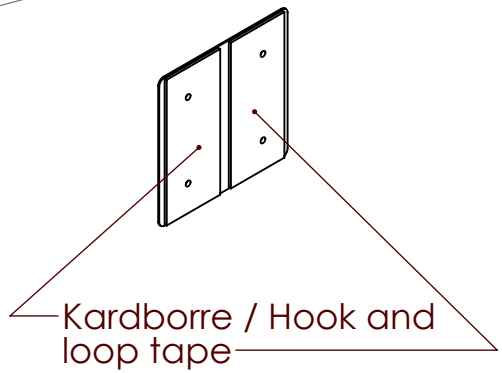

© 2024

GÖTESSONS

Art.nr.	Name
125442 & 125443	Sound Off Square EcoSUND 1200x300x20 mm wall

View placement	General tolerance	Material
	SS-ISO 2768-1 m	EcoSUND

THIS DRAWING AND INFORMATION CONTAINED HERIN ARE THE PROPERTY OF GÖTESSONS DESIGN GROUP AB AND SHALL BE RETURNED UPON DEMAND AND SHALL NOT BE REPRODUCED IN WHOLE OR IN PART TO ANYONE ELSE OR USED WITHOUT WRITTEN CONSENT OF GÖTESSONS DESIGN GROUP AB

Rev	Format	Scale	Page
-	A4	1:10	1/1